DRAWING

ROOT

LAST_MODIFIED=Mon Dec 2 10:55:03 1996

CRATE LEVEL TRIGGER CARD

ROOT

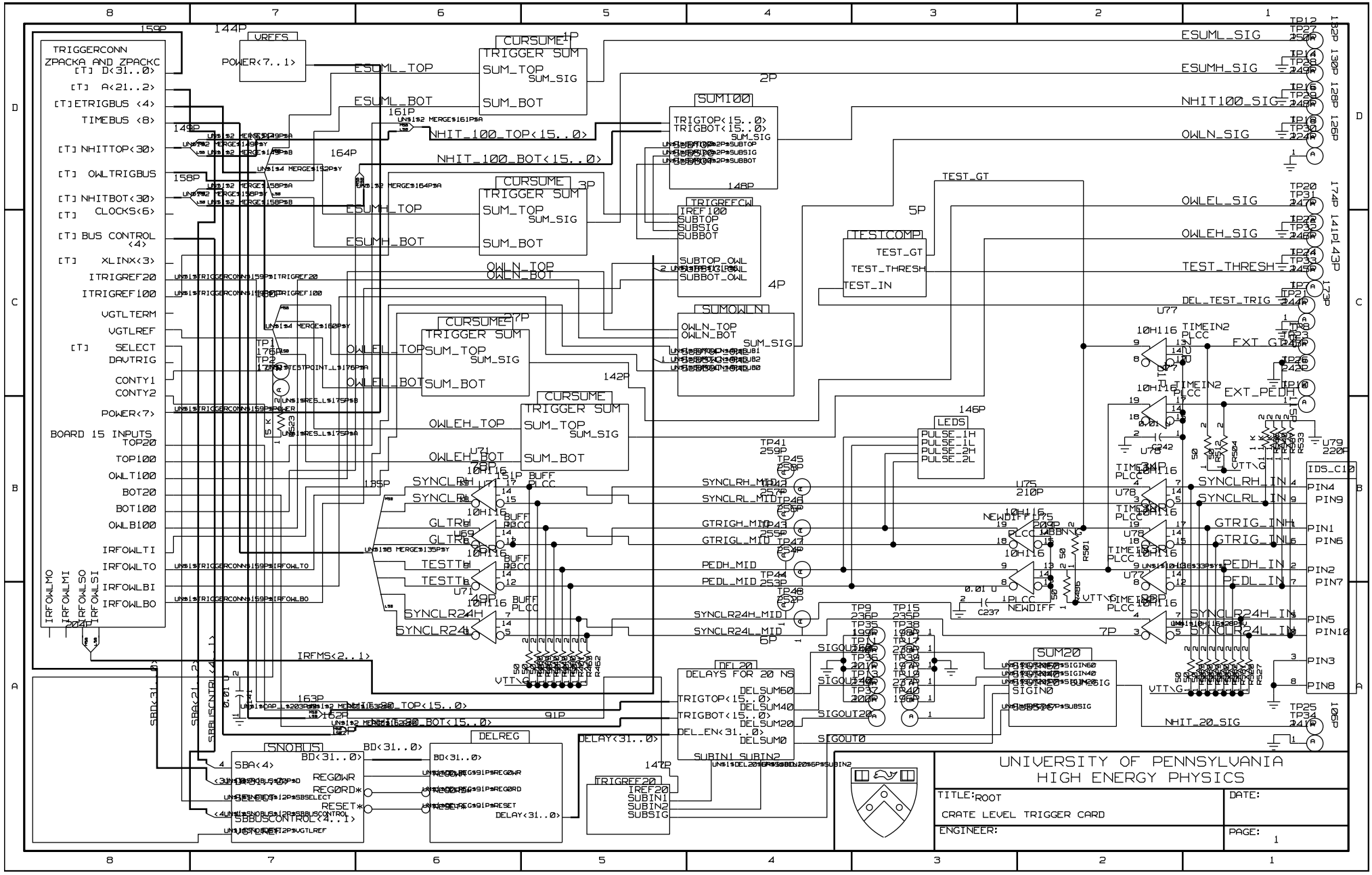

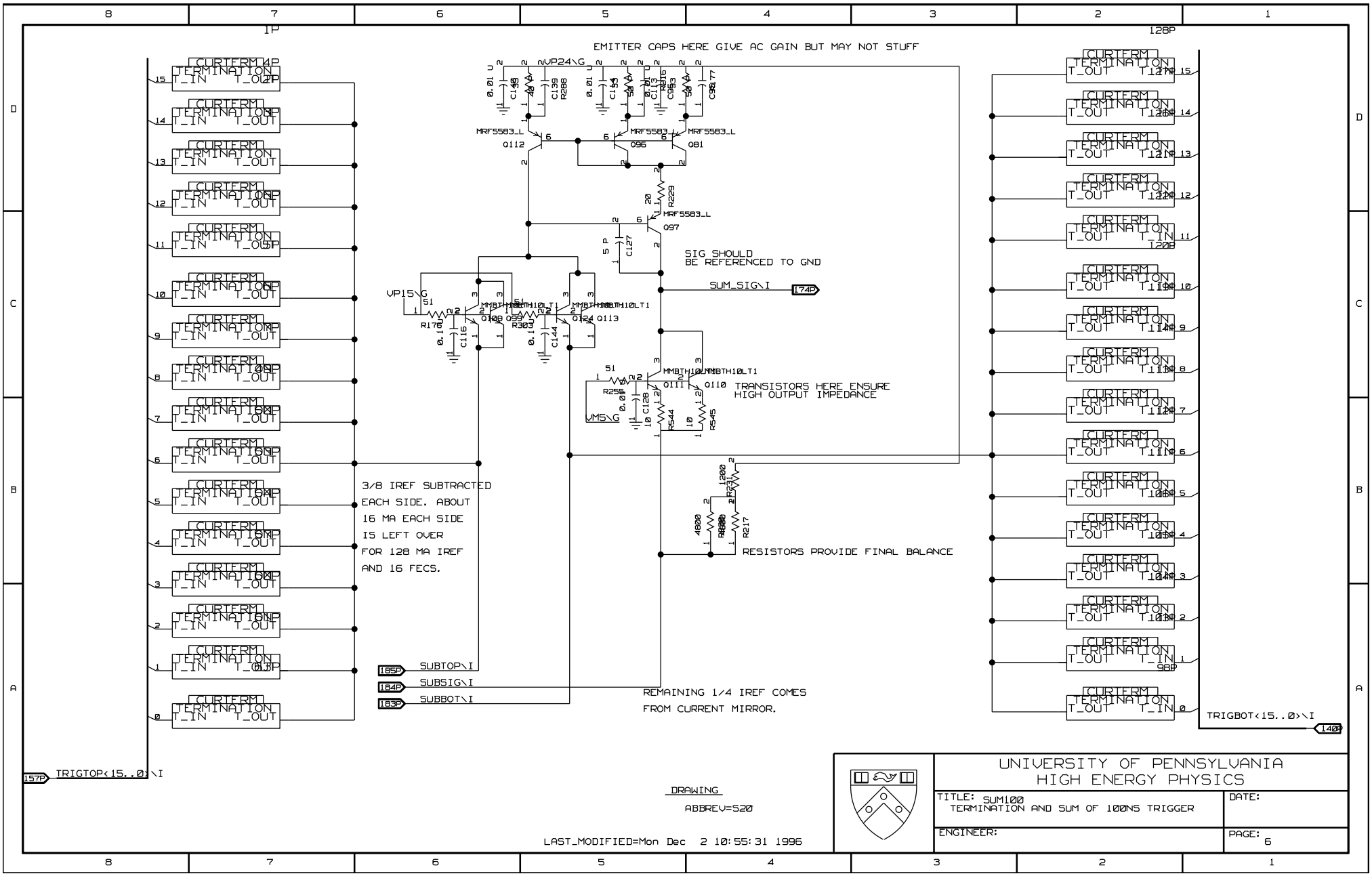

DRAWING

ABBREV=S20

LAST_MODIFIED=Mon Dec 2 10:55:31 1996

UNIVERSITY OF PENNSYLVANIA
HIGH ENERGY PHYSICS

TITLE: SUM100 TERMINATION AND SUM OF 100NS TRIGGER	DATE:
ENGINEER:	PAGE: 6

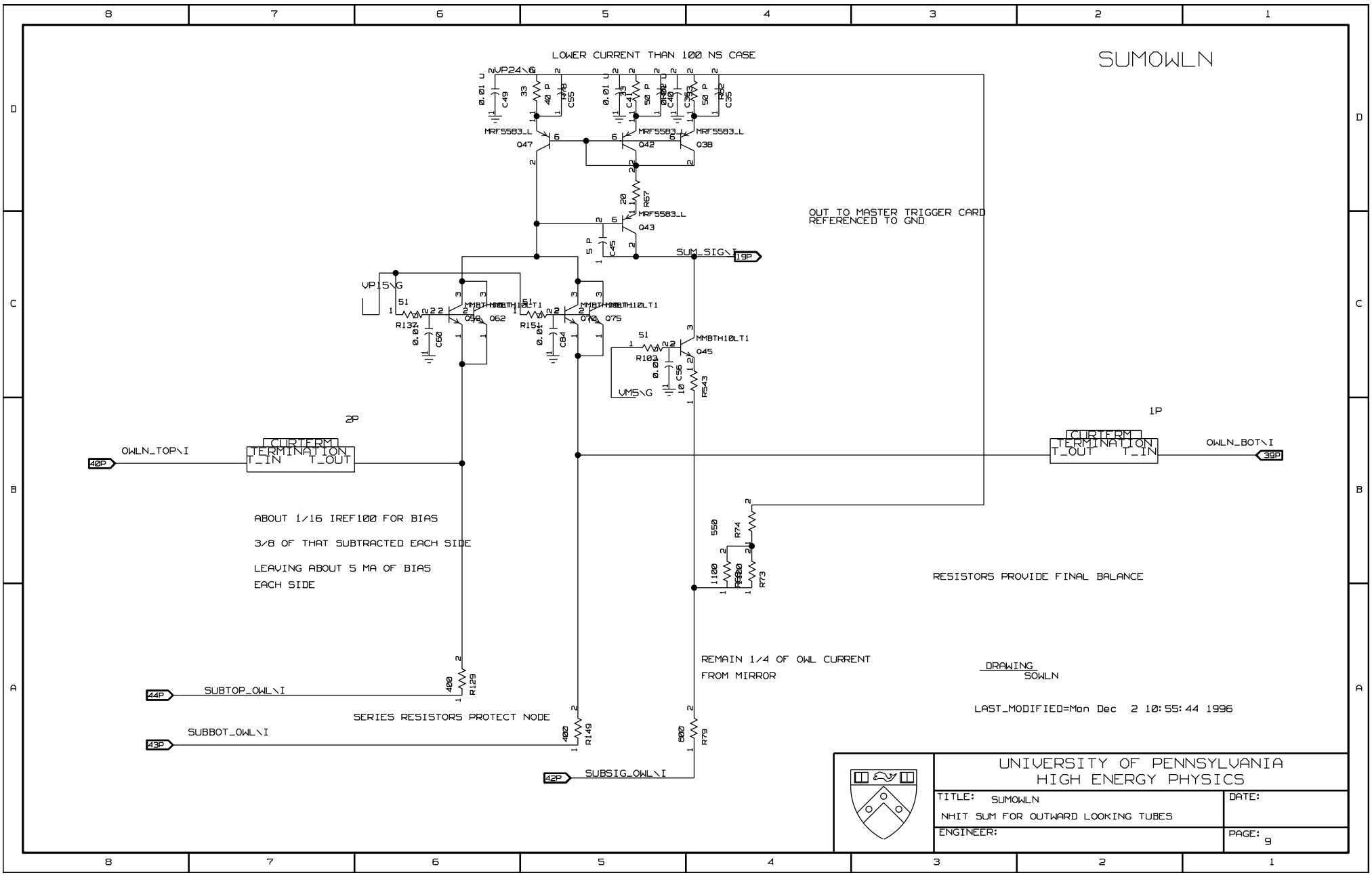
SUMOWLN
LOWER CURRENT THAN 100 NS CASE
VP24\G
MRF5583_L
Q47
Q42
Q38
R67
Q43
C45
SUM_SIG\I
19P
OUT TO MASTER TRIGGER CARD
REFERENCED TO GND
VP15\G
MMBTH10LT1
Q59
Q62
Q70
Q75
Q45
R132
R151
R103
R543
VM5\G
2P
1P
CURTERM
TERMINATION
T_IN
T_OUT
OWLN_TOP\I
40P
OWLN_BOT\I
39P
ABOUT 1/16 IREF100 FOR BIAS
3/8 OF THAT SUBTRACTED EACH SIDE
LEAVING ABOUT 5 MA OF BIAS
EACH SIDE
R74
R73
RESISTORS PROVIDE FINAL BALANCE
REMAIN 1/4 OF OWL CURRENT
FROM MIRROR
R129
SUBTOP_OWL\I
44P
SERIES RESISTORS PROTECT NODE
R149
R79
SUBBOT_OWL\I
43P
SUBSIG_OWL\I
42P
DRAWING
SOWLN
LAST_MODIFIED=Mon Dec 2 10:55:44 1996
UNIVERSITY OF PENNSYLVANIA
HIGH ENERGY PHYSICS
TITLE: SUMOWLN
NHIT SUM FOR OUTWARD LOOKING TUBES
DATE:
ENGINEER:
PAGE: 9

CAPS MAKE AC LOOK BETTER---MAY NOT STUFF.

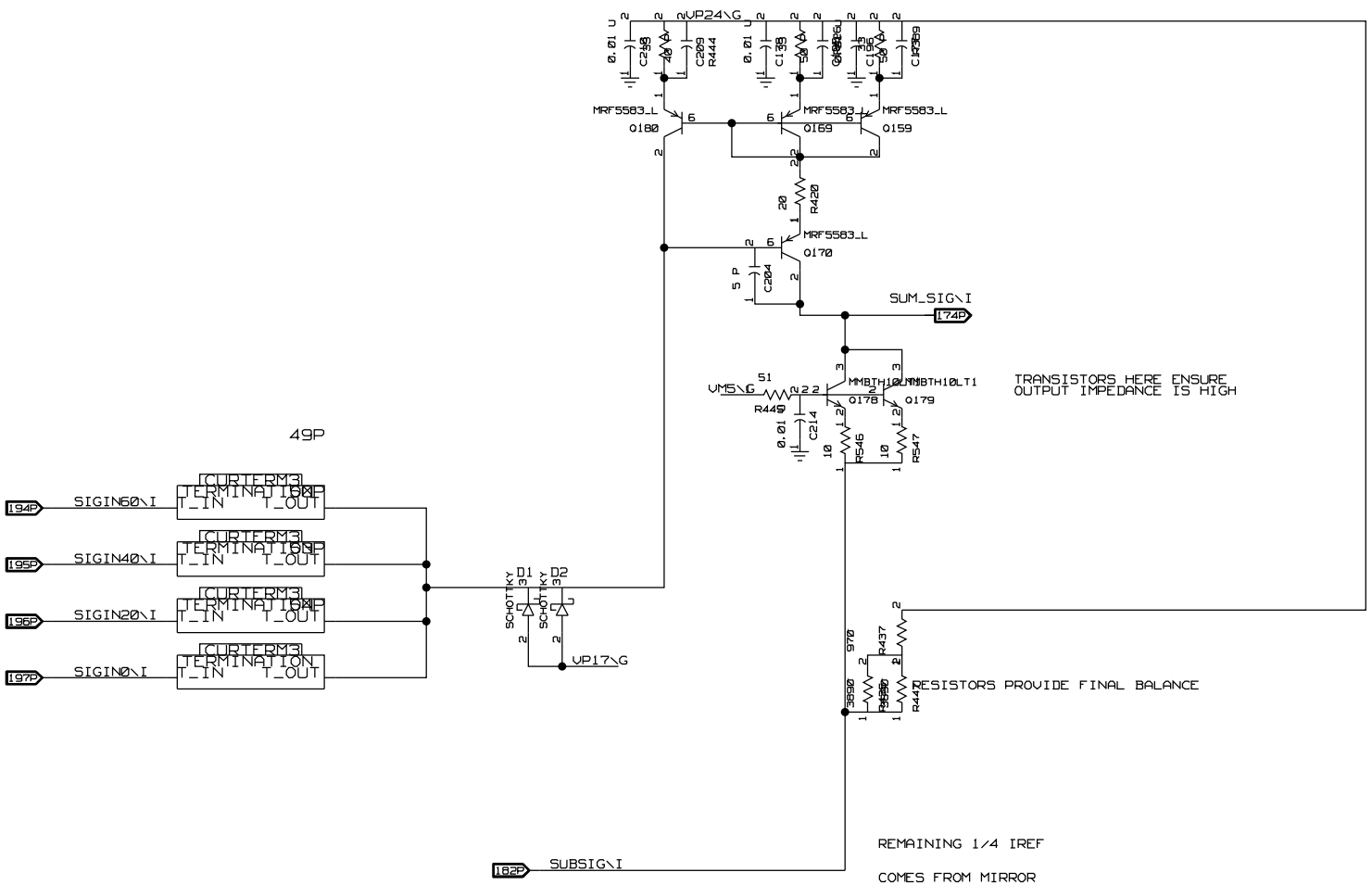

DRAWING

ABBREV=S20

LAST_MODIFIED=Mon Dec 2 10:55:55 1996

UNIVERSITY OF PENNSYLVANIA
HIGH ENERGY PHYSICS

TITLE: SUM20
TERMINATION AND SUM OF 20NS TRIGGER

DATE:

ENGINEER:

PAGE: 8

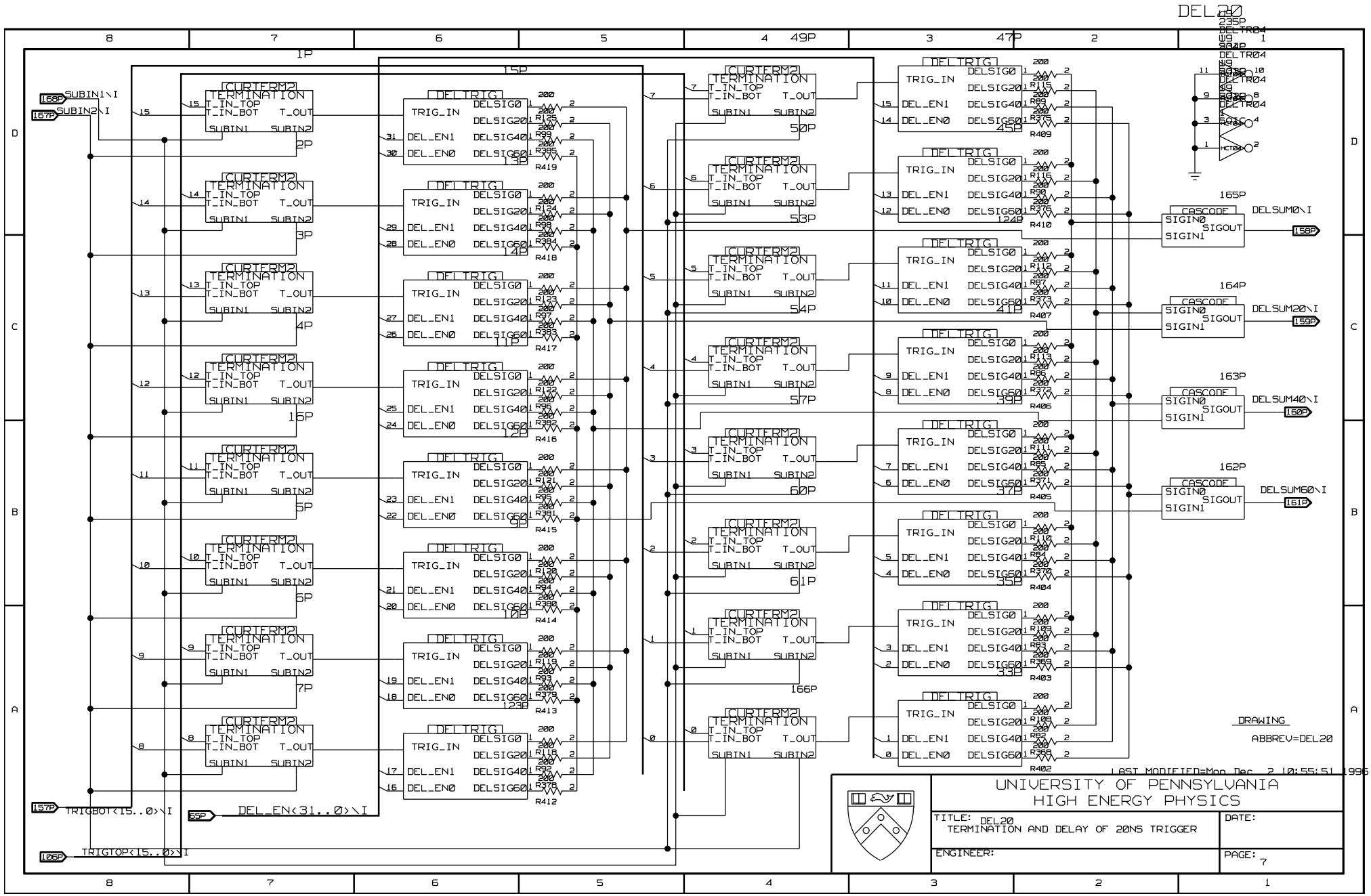
DEL20
UNIVERSITY OF PENNSYLVANIA
HIGH ENERGY PHYSICS
TITLE: DEL20
TERMINATION AND DELAY OF 20NS TRIGGER
DATE:
ENGINEER:
PAGE: 7
DRAWING
ABBREV=DEL20
LAST MODIFIED=Mon Dec 2 10:55:51 1996
SUBIN1\I
SUBIN2\I
TRIGBOT<15..0>\I
TRIGTOP<15..0>\I
DEL_EN<31..0>\I
DELSUM0\I
DELSUM20\I
DELSUM40\I
DELSUM60\I
CURTERM2
TERMINATION
DEL_TRIG
CASCODE
HCT04

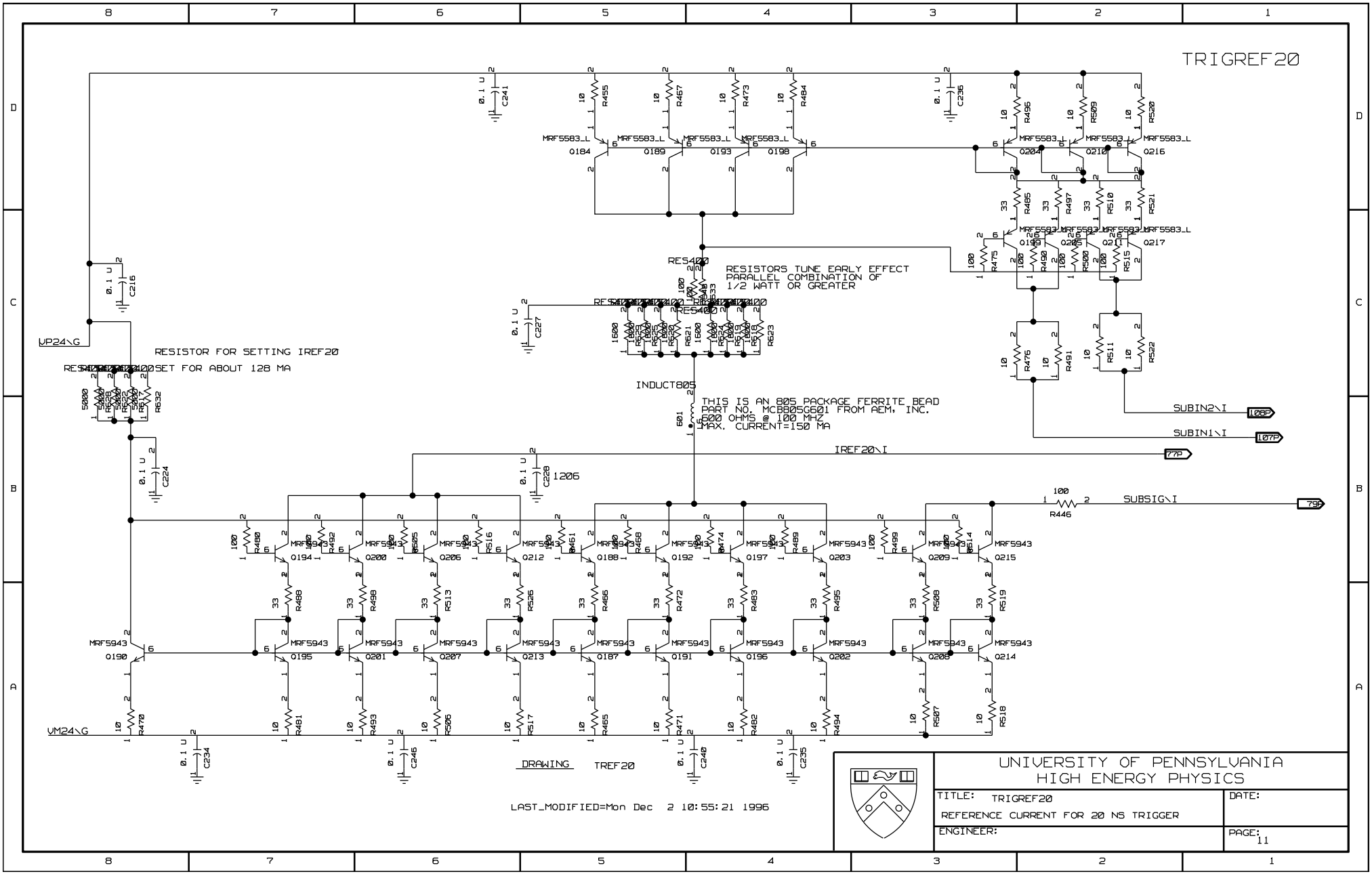
TRIGREF20
RESISTOR FOR SETTING IREF20
SET FOR ABOUT 128 MA
RESISTORS TUNE EARLY EFFECT
PARALLEL COMBINATION OF
1/2 WATT OR GREATER
INDUCT805
THIS IS AN 805 PACKAGE FERRITE BEAD
PART NO. MCB805G601 FROM AEM, INC.
600 OHMS @ 100 MHZ
MAX. CURRENT=150 MA
VP24\G
VM24\G
IREF20\I
SUBIN2\I
SUBIN1\I
SUBSIG\I
DRAWING TREF20
LAST_MODIFIED=Mon Dec 2 10:55:21 1996
UNIVERSITY OF PENNSYLVANIA
HIGH ENERGY PHYSICS
TITLE: TRIGREF20
REFERENCE CURRENT FOR 20 NS TRIGGER
ENGINEER:
DATE:
PAGE: 11

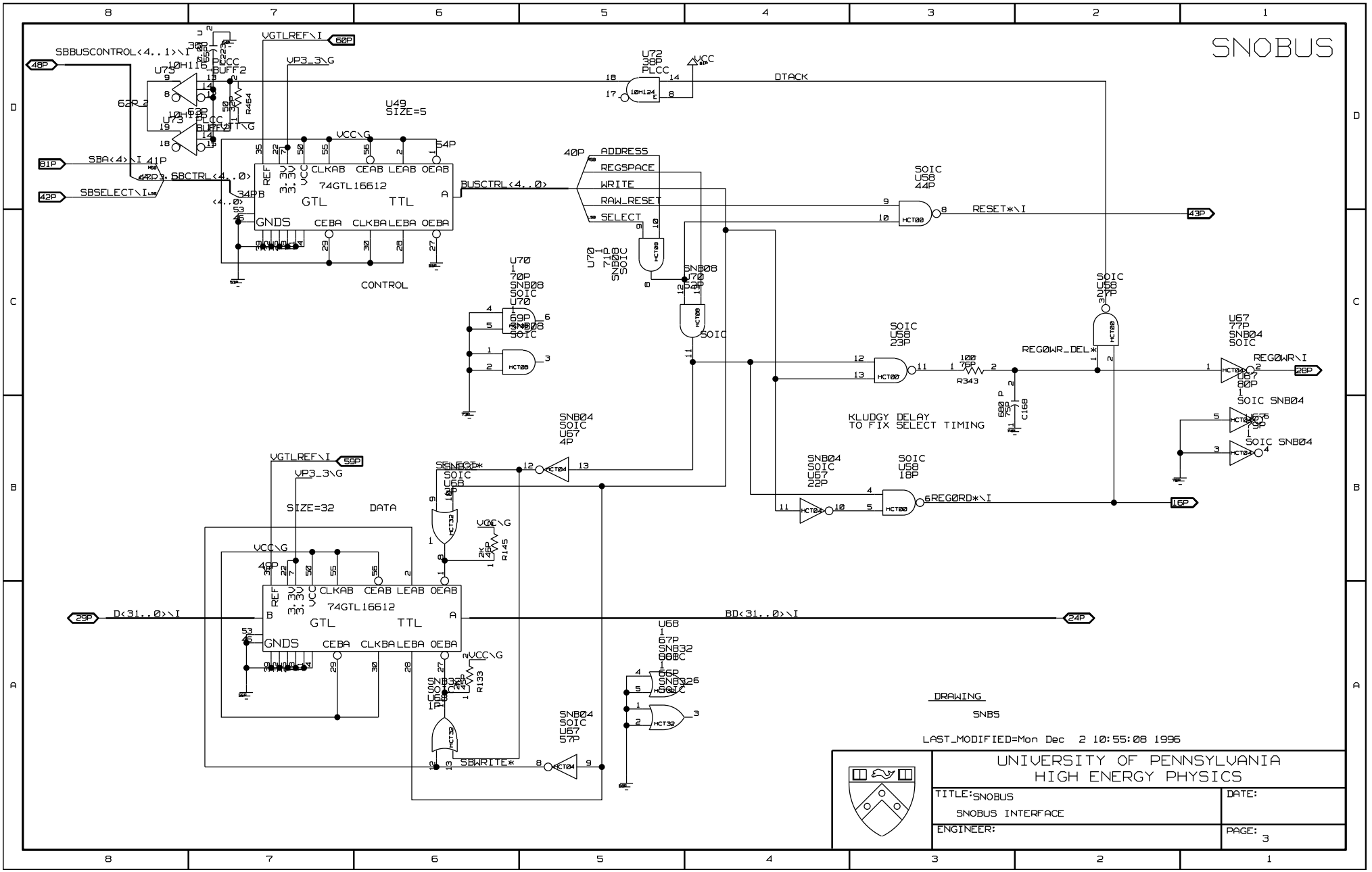
SNOBUS
SBBUSCONTROL<4..1>\I
VGTLREF\I
VP3_3\G
DTACK
U49
SIZE=5
74GTL16612
GTL
TTL
CONTROL
SBA<4>\I
SBSELECT\I
SBCTRL<4..0>
BUSCTRL<4..0>
ADDRESS
REGSPACE
WRITE
RAW_RESET
SELECT
RESET*\I
REGØWR_DEL*
REGØWR\I
KLUDGY DELAY
TO FIX SELECT TIMING
REGØRD*\I
SIZE=32
DATA
D<31..0>\I
BD<31..0>\I
SBWRITE*
DRAWING
SNB5
LAST_MODIFIED=Mon Dec 2 10:55:08 1996
UNIVERSITY OF PENNSYLVANIA
HIGH ENERGY PHYSICS
TITLE:SNOBUS
SNOBUS INTERFACE
DATE:
ENGINEER:
PAGE:
3

LEDS

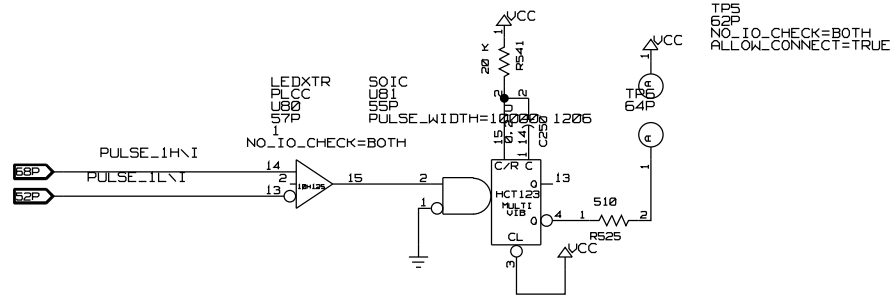

PULLDOWNS ARE AT FAR END OF SIGNALS, NOT HERE

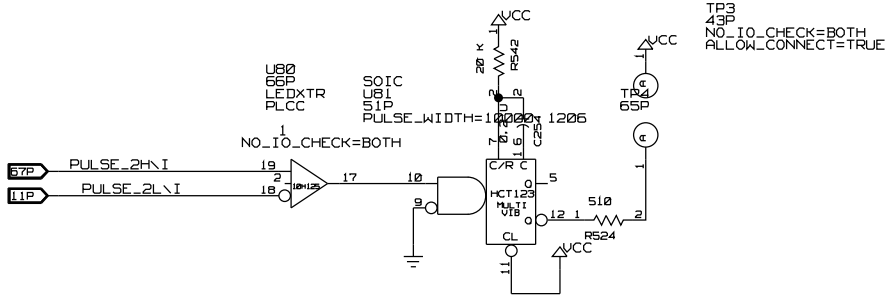

DRAWING

LEDS

LAST_MODIFIED=Mon Dec 2 10:55:16 1996

UNIVERSITY OF PENNSYLVANIA HIGH ENERGY PHYSICS	
TITLE: LEDS LED MONITORS	DATE:
ENGINEER:	PAGE: 14

TESTCOMP

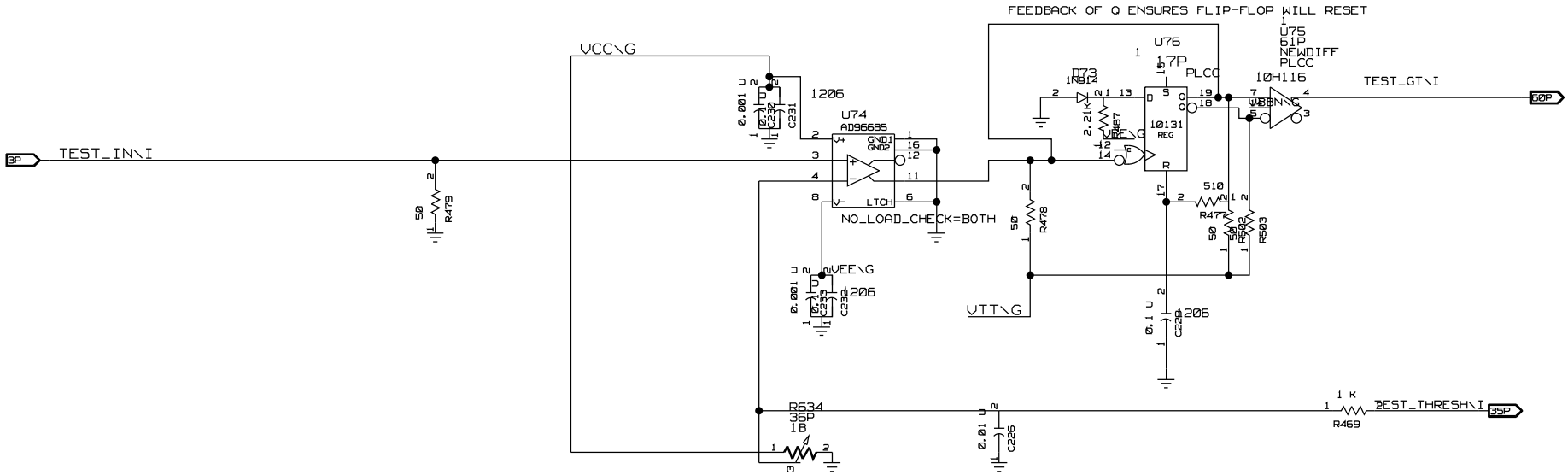

DRAWING
ABBREV=TCMP

LAST_MODIFIED=Mon Dec 2 10:55:47 1996

UNIVERSITY OF PENNSYLVANIA
HIGH ENERGY PHYSICS

TITLE: TESTCOMP TEST COMPARATOR	DATE:
ENGINEER:	PAGE: 13

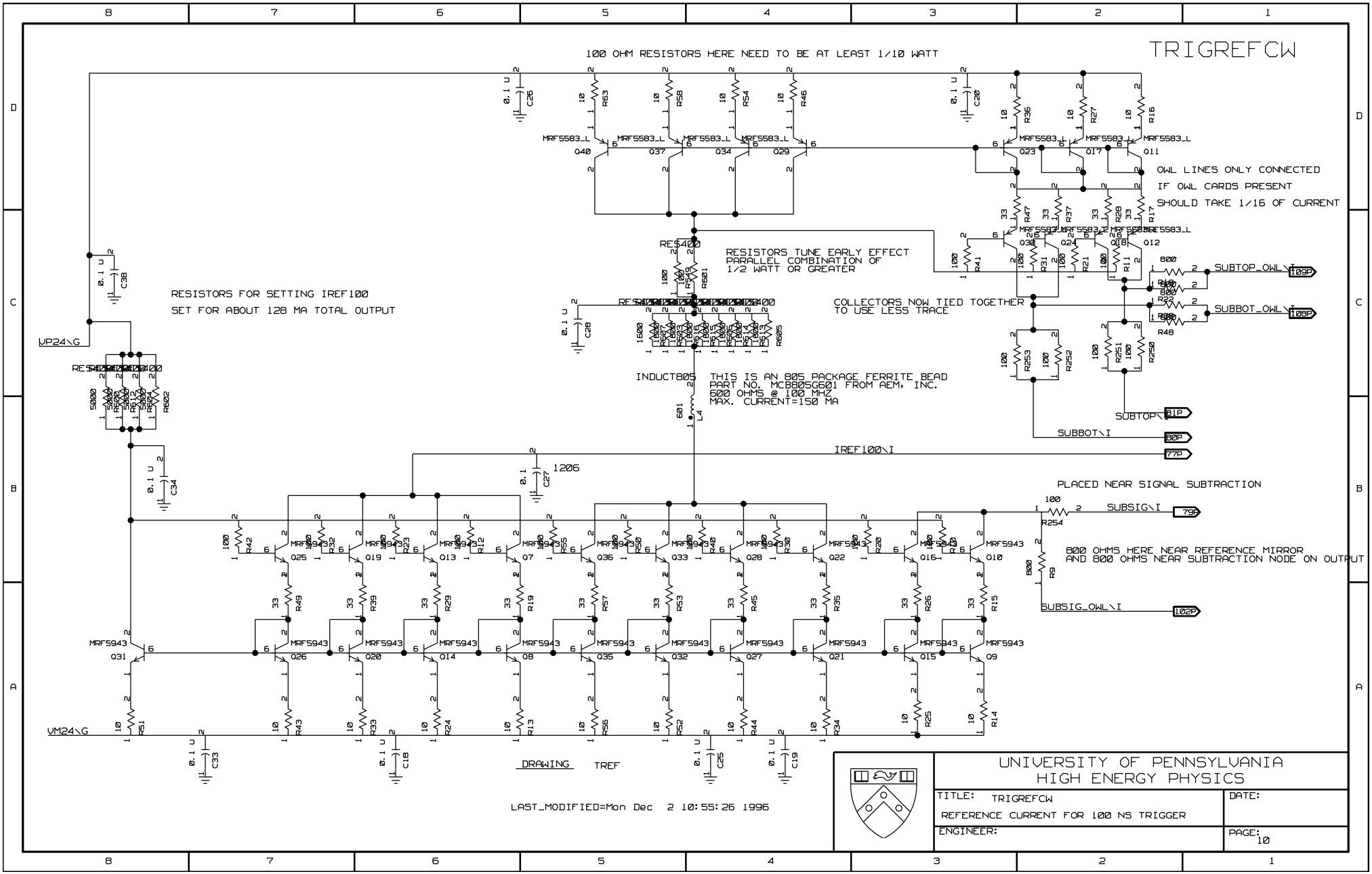
TRIGREFCW
100 OHM RESISTORS HERE NEED TO BE AT LEAST 1/10 WATT
OWL LINES ONLY CONNECTED
IF OWL CARDS PRESENT
SHOULD TAKE 1/16 OF CURRENT
RESISTORS TUNE EARLY EFFECT
PARALLEL COMBINATION OF
1/2 WATT OR GREATER
RESISTORS FOR SETTING IREF100
SET FOR ABOUT 128 MA TOTAL OUTPUT
COLLECTORS NOW TIED TOGETHER
TO USE LESS TRACE
INDUCT805 THIS IS AN 805 PACKAGE FERRITE BEAD
PART NO. MCB805G601 FROM AEM, INC.
600 OHMS @ 100 MHZ
MAX. CURRENT=150 MA
PLACED NEAR SIGNAL SUBTRACTION
800 OHMS HERE NEAR REFERENCE MIRROR
AND 800 OHMS NEAR SUBTRACTION NODE ON OUTPUT
SUBTOP_OWL\I
SUBBOT_OWL\I
SUBTOP\I
SUBBOT\I
IREF100\I
SUBSIG\I
SUBSIG_OWL\I
VP24\G
VM24\G
MRF5583_L
MRF5943
DRAWING TREF
LAST_MODIFIED=Mon Dec 2 10:55:26 1996
UNIVERSITY OF PENNSYLVANIA
HIGH ENERGY PHYSICS
TITLE: TRIGREFCW
REFERENCE CURRENT FOR 100 NS TRIGGER
DATE:
ENGINEER:
PAGE: 10

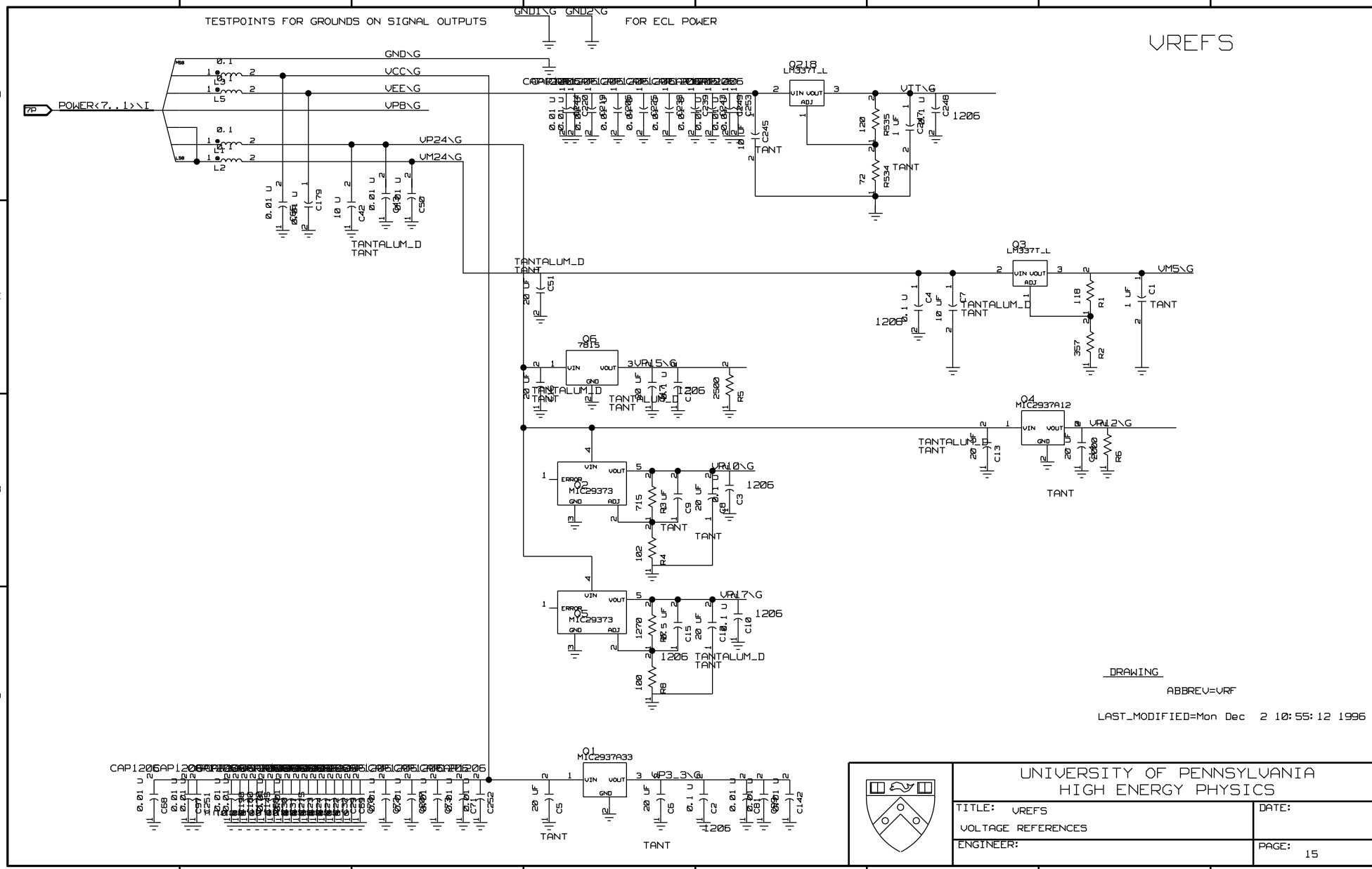
8P
TESTPOINTS FOR GROUNDS ON SIGNAL OUTPUTS
FOR ECL POWER
VREFS
GND1\G
GND2\G
GND\G
VCC\G
VEE\G
VP8\G
VP24\G
VM24\G
POWER<7..1>\I
Q218
LM337T_L
VIT\G
Q3
LM337T_L
VM5\G
Q6
7815
VP15\G
Q4
MIC2937A12
VP12\G
Q2
MIC29373
VP10\G
Q5
MIC29373
VP17\G
Q1
MIC2937A33
VP3_3\G
TANTALUM_D
TANT
1206
DRAWING
ABBREV=VRF
LAST_MODIFIED=Mon Dec 2 10:55:12 1996
UNIVERSITY OF PENNSYLVANIA
HIGH ENERGY PHYSICS
TITLE: VREFS
VOLTAGE REFERENCES
DATE:
ENGINEER:
PAGE: 15

CURSUME

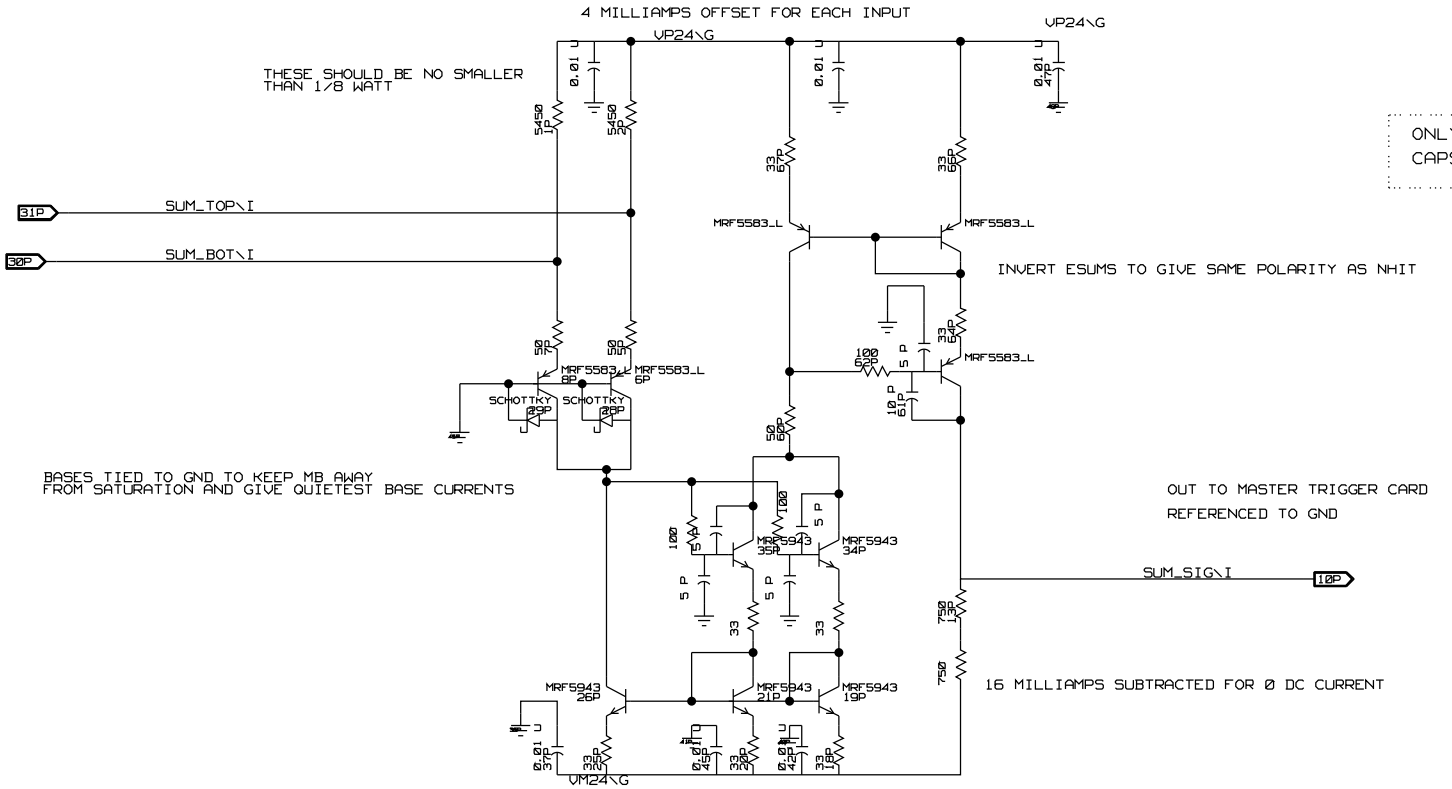

ONLY STUFF BASE-COLLECTOR AND BASE-GND CAPS IF OSCILLATIONS ARE A PROBLEM

DRAWING
ESUM

LAST_MODIFIED=Thu Sep 12 15:47:06 1996

UNIVERSITY OF PENNSYLVANIA
HIGH ENERGY PHYSICS

TITLE: CURSUME CURRENT SUM FOR ENERGY TRIGGER	DATE:
ENGINEER:	PAGE: 5

DELREG

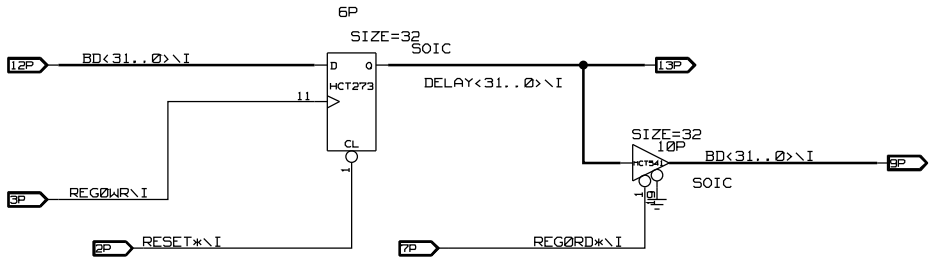

DRAWING

DLRG

LAST_MODIFIED=Mon Sep 9 15:20:58 1996

UNIVERSITY OF PENNSYLVANIA HIGH ENERGY PHYSICS	
TITLE: DELREG REGISTERS FOR 20 NS DELAYS	DATE:
ENGINEER:	PAGE: 4

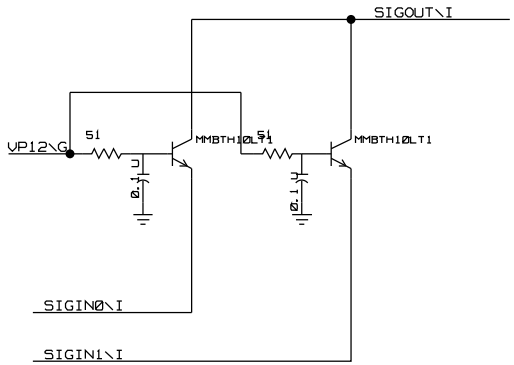

DRAWING

CASCS

LAST_MODIFIED=Tue Sep 10 17:37:02 1996

UNIVERSITY OF PENNSYLVANIA
HIGH ENERGY PHYSICS

TITLE: CASCODES
CASCODE BEFORE DELAY

DATE:

ENGINEER:

PAGE:

DELTRIG

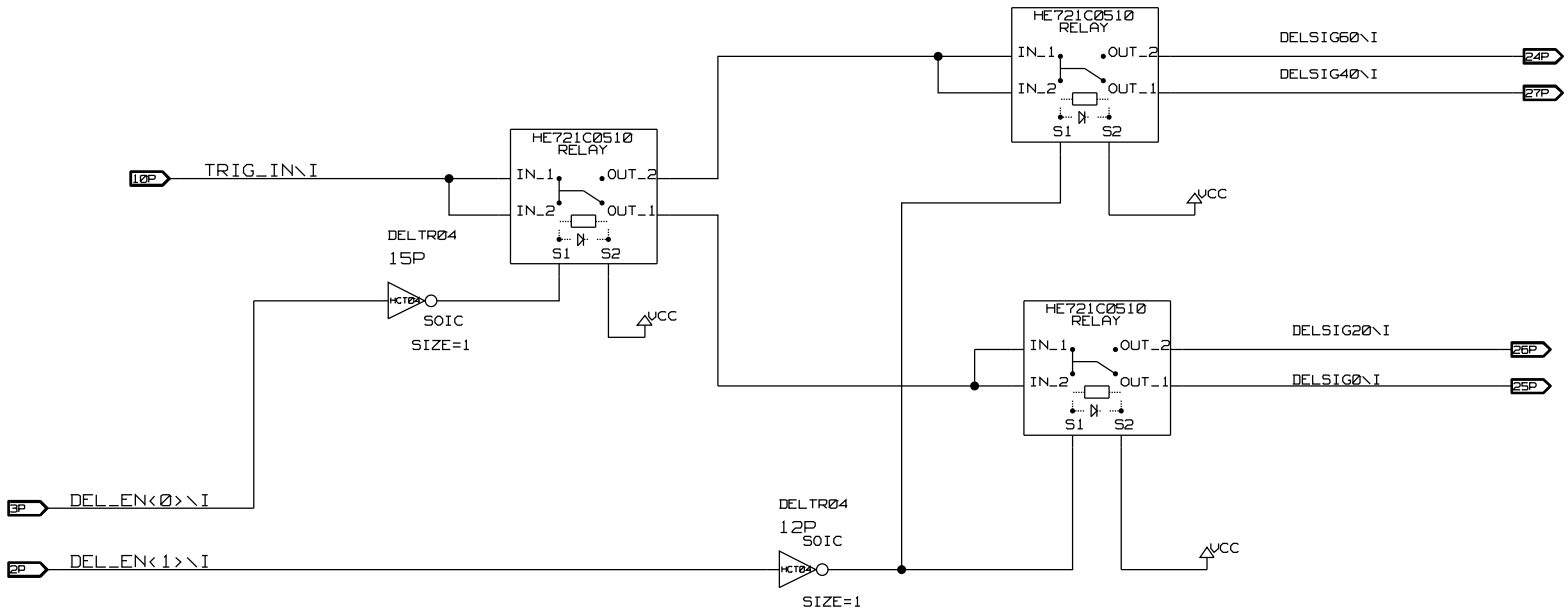

TRUTH TABLE

00 = 0 DELAY
01 = 20 NS DELAY
10 = 40 NS DELAY
11 = 60 NS DELAY

DRAWING

ABBREV=DTRG

LAST_MODIFIED=Tue Sep 10 13:30:41 1996

UNIVERSITY OF PENNSYLVANIA
HIGH ENERGY PHYSICS

TITLE: DELTRIG 20NS TRIGGER DELAYS	DATE:
ENGINEER:	PAGE: 7B

CURTERM2

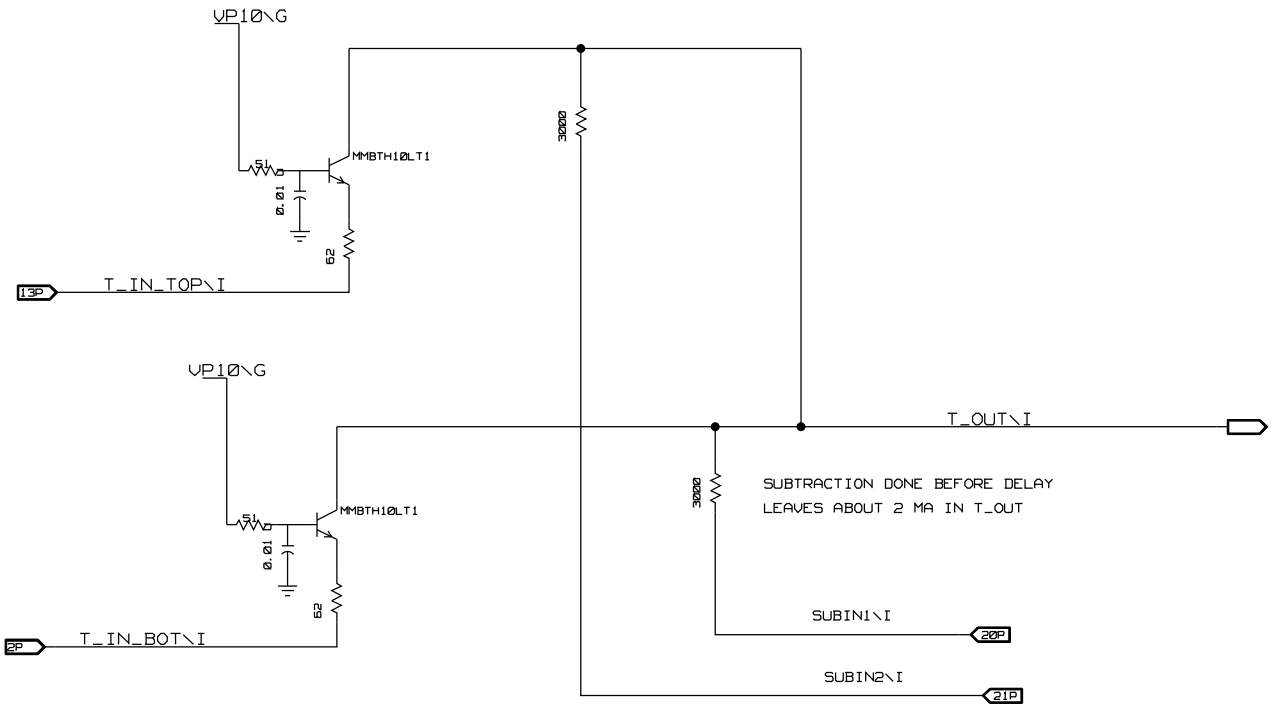

ABOUT 4 MA THROUGH EACH TRANSISTOR
SO 1/GM=6 OHMS
PLUS 40 OHMS FOR TERMINATION.
CAN BE CHANGED.

DRAWING

ABBREV=CTRM2

LAST_MODIFIED=Tue Sep 10 11:00:48 1996

UNIVERSITY OF PENNSYLVANIA
HIGH ENERGY PHYSICS

TITLE: CURTERM2 TERMINATION OF 20NS TRIGGER	DATE:
ENGINEER:	PAGE: 7A

CURTERM

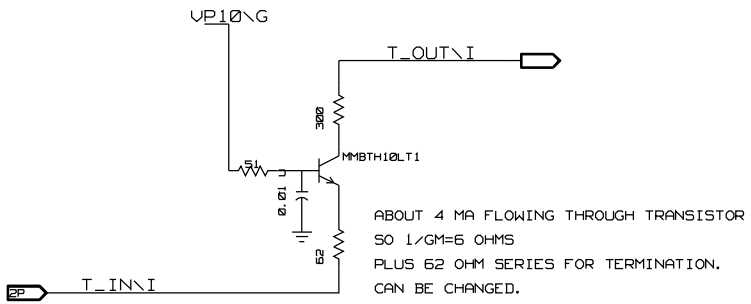

ABOUT 4 MA FLOWING THROUGH TRANSISTOR
SO 1/GM=6 OHMS
PLUS 62 OHM SERIES FOR TERMINATION.
CAN BE CHANGED.

DRAWING

ABBREV=CTRM

LAST_MODIFIED=Tue Sep 10 10:40:00 1996

UNIVERSITY OF PENNSYLVANIA
HIGH ENERGY PHYSICS

TITLE: CURTERM TERMINATION OF 100NS TRIGGER	DATE:
ENGINEER:	PAGE: 6A

CURTERM3

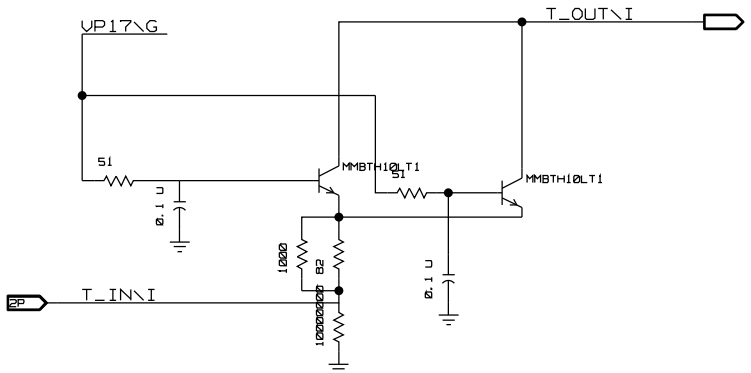

PARALLEL COMBINATION OF 1K AND 82 OHMS GIVES TUNABLE 75 OHM TERMINATION

DRAWING

ABBREV=CTRM3

LAST_MODIFIED=Mon Sep 9 17:08:06 1996

UNIVERSITY OF PENNSYLVANIA HIGH ENERGY PHYSICS	
TITLE: CURTERM3 TERMINATION OF 20NS TRIGGER	DATE:
ENGINEER:	PAGE: 8A

SNOBUS DRAFT PIN ARRANGEMENT - TRIGGER STATION

REVISED VERSION WITH:
NO MORE THAN 4 BUS LINES PER ROW
VM8 ON C4, C5 PINS
SEPARATE ROWS FOR VP24, VM24
ADJUSTED TO ALLOW FOR PADDLE CARD ORIENTATION

32 CHAN FEC CARD VIEW
TRANSLATOR TERMINATES THE TRIGGER AND TIMING BUSSES
TRANSLATOR DOES HAVE 17 SELECT LINES
NAMING: TOP SIGNALS END IN T, BOTTOM IN B
SB PREFIX = SNOBUS - BACKPLANE SIGNALS

CONN165

A		B		C		D		E	
A1	1 GND	B1	34 OWLSUMLB	C1	67 GND	D1	100 OWLSUMHB	E1	133 CONTY1 \I
A2	2 SBESUMLB	B2	35 GND	C2	68 SBESUMHB	D2	101 GND	E2	134 GND
A3	3 GND	B3	36 GND	C3	69 GND	D3	102 GND	E3	135 GND
A4	4 SBGLTRH	B4	37 SBGLTRL	C4	70 VM24	D4	103 SBTESTTH	E4	136 SBTESTTL
A5	5 SBSYNCLRH	B5	38 SBSYNCLRL	C5	71 VM24	D5	104 SBSYNCLR24H	E5	137 SBSYNCLR24L
A6	6 GND	B6	39 GND	C6	72 GND	D6	105 GND	E6	138 GND
A7	7 GND	B7	40 SBA<2> \I	C7	73 SBA<3> \I	D7	106 SBA<4> \I	E7	139 SBA<5> \I
A8	8 SBA<6> \I	B8	41 GND	C8	74 SBA<7> \I	D8	107 SBA<8> \I	E8	140 SBA<9> \I
A9	9 SBA<10> \I	B9	42 SBA<11> \I	C9	75 GND	D9	108 SBA<12> \I	E9	141 SBA<13> \I
A10	10 SBA<14> \I	B10	43 SBA<15> \I	C10	76 SBA<16> \I	D10	109 GND	E10	142 SBA<17> \I
A11	11 SBA<18> \I	B11	44 SBA<19> \I	C11	77 SBA<20> \I	D11	110 SBA<21> \I	E11	143 GND
A12	12 GND	B12	45 SBD<0> \I	C12	78 SBD<1> \I	D12	111 SBD<2> \I	E12	144 SBD<3> \I
A13	13 SBD<4> \I	B13	46 SBD<5> \I	C13	79 SBD<6> \I	D13	112 GND	E13	145 SBD<7> \I
A14	14 SBD<8> \I	B14	47 SBD<9> \I	C14	80 GND	D14	113 SBD<10> \I	E14	146 SBD<11> \I
A15	15 SBD<12> \I	B15	48 GND	C15	81 SBD<13> \I	D15	114 SBD<14> \I	E15	147 SBD<15> \I
A16	16 GND	B16	49 SBD<16> \I	C16	82 SBD<17> \I	D16	115 SBD<18> \I	E16	148 SBD<19> \I
A17	17 SBD<20> \I	B17	50 SBD<21> \I	C17	83 SBD<22> \I	D17	116 SBD<23> \I	E17	149 GND
A18	18 SBD<24> \I	B18	51 SBD<25> \I	C18	84 SBD<26> \I	D18	117 GND	E18	150 SBD<27> \I
A19	19 SBD<28> \I	B19	52 SBD<29> \I	C19	85 GND	D19	118 SBD<30> \I	E19	151 SBD<31> \I
A20	20 SBREGSPACE	B20	53 GND	C20	86 VM24	D20	119 VM24	E20	152 SBRESET
A21	21 GND	B21	54 SBDTACK	C21	87 SBWRITE	D21	120 VGTLREF \I	E21	153 SBDAVA \I
A22	22 VP24	B22	55 VP24	C22	88 GND	D22	121 GND	E22	154 SBDONE_PROGXL
A23	23 SBDINXL	B23	56 GND	C23	89 SBCLKXL	D23	122 SBSELECT \I	E23	155 GND
A24	24 VP8	B24	57 VP8	C24	90 VP8	D24	123 VP8	E24	156 VP8
A25	25 GND	B25	58 GND	C25	91 GND	D25	124 GND	E25	157 GND
A26	26 VP5	B26	59 VP5	C26	92 VP5	D26	125 VP5	E26	158 VP5
A27	27 VP5	B27	60 VP5	C27	93 VP5	D27	126 VP5	E27	159 VP5
A28	28 SBCLKADH	B28	61 SBCLKADL	C28	94 GND	D28	127 SBCLKMEMH	E28	160 SBCLKMEML
A29	29 SBCLKSQH	B29	62 SBCLKSQL	C29	95 GND	D29	128 ITRIGREF20 \I	E29	161 ITRIGREF100 \I
A30	30 VM5	B30	63 VM5	C30	96 VM5	D30	129 VM5	E30	162 VM5
A31	31 VM5	B31	64 VM5	C31	97 VM5	D31	130 VM5	E31	163 VM5
A32	32 SBESUMLT	B32	65 GND	C32	98 SBESUMHT	D32	131 GND	E32	164 GND
A33	33 GND	B33	66 OWLSUMLT	C33	99 VGTLTERM \I	D33	132 OWLSUMHT	E33	165 CONTY2 \I

J3

HIGH/LOW TRUE FINAL OR PENULTIMATE H OR L

54P

- BOTTOM TRIGGER
- GND LINE
- TIMING
- BUS ADDRESS
- BUS DATA
- BUS CONTROL
- XILINX LOAD PINS
- MAIN POWER DIST
- CLOCK
- GND LINE
- TOP TRIGGER

48P
SBREGSPACE
SBWRITE
SBDTACK
SBRESET
→ SBBUSCONTROL<4..1> \I

49P
SBSYNCLRH
SBSYNCLRL
SBGLTRH
SBGLTRL
SBTESTTH
SBTESTTL
SBSYNCLR24H
SBSYNCLR24L
→ SBTIMEBUS<8..1> \I

59P
SBCLKXL
SBDINXL
SBDONE_PROGXL
→ SBXLINX<3..1> \I

60P
GND
VP5
VM5
VP8
VM24
VP24
VM24
→ POWER<7..1> \I

53P
SBCLKADH
SBCLKADL
SBCLKSQH
SBCLKSQL
SBCLKMEMH
SBCLKMEML
→ SBCLOCKS<6..1> \I

56P
SBESUMLT
SBESUMHT
SBESUMLB
SBESUMHB
→ SBETRIG<4..1> \I

58P
OWLSUMLT
OWLSUMHT
OWLSUMLB
OWLSUMHB
→ SBOWLTRIGBUS<4..1> \I

CONTY1 AND CONTY2 ARE CONNECTOR CONTINUITY TEST PINS

POWER IS:
+24V, -24V - ADCS, SOME OP AMPS/DACS, REFERENCES, TRIGGER
+8 FOR BIPOLAR, DACS, -8 FOR DACS
+5 FOR CMOS AND GENERAL LOGIC
-5.2 FOR ECL AND BIPOLAR

REFERENCES ARE:
VTRIGREF FOR CURRENT SUM BASE REFERENCES
VGTLREF FOR GTL TRANSCEIVER TERMINATIONS

THREE CLOCK VERSION -
SBCLKAD FOR ADCS
SBCKLSQ FOR SEQUENCER
SBCLKMEM FOR MEMORY

DRAWING

UNIVERSITY OF PENNSYLVANIA
HIGH ENERGY PHYSICS

TITLE: TRIGGERCONN
LAST_MODIFIED=Mon Dec 2 10:55:36 1996

ENGINEER: RVB
ABBREV=TRIGGERCONN

DATE:

PAGE: 8 OF 10

J1 AND J3 TRIGGER CONNECTORS - HAMMERHEAD VERSION

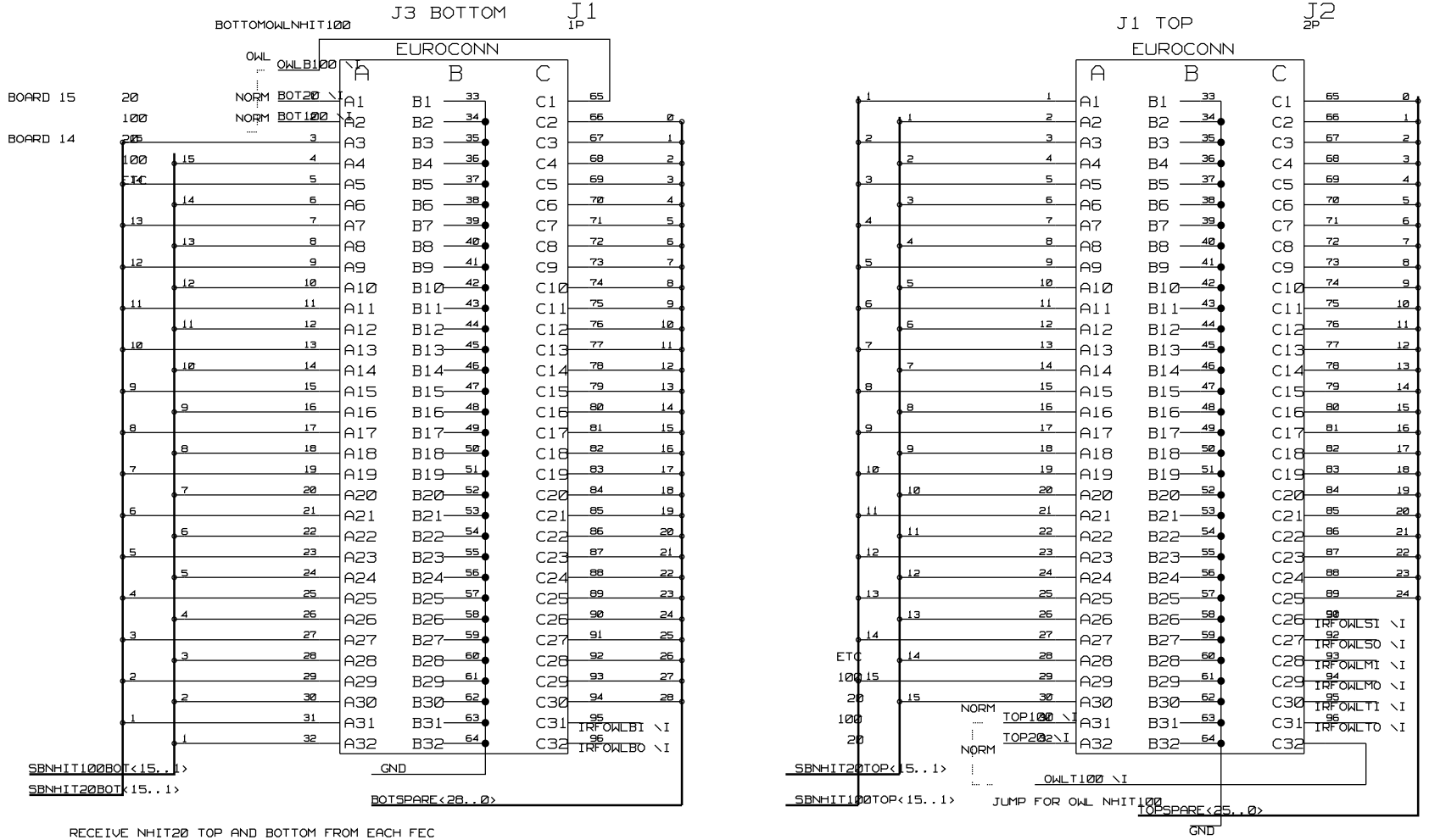

RECEIVE NHIT20 TOP AND BOTTOM FROM EACH FEC

RECEIVE NHIT100 TOP AND BOTTOM FROM EACH FEC

TOTAL 64 SIGNALS

135P

SBNHIT20TOP<15..1>

SBNHIT100TOP<15..1>

SBNHITTOP<29..0> \I

134P

SBNHIT20BOT<15..1>

SBNHIT100BOT<15..1>

SBNHITBOT<29..0> \I

DRAWING

UNIVERSITY OF PENNSYLVANIA
HIGH ENERGY PHYSICS

TITLE: TRIGGERCONN LAST_MODIFIED=Mon Dec	DATE: 2 10:55:41 1996
ENGINEER: ABBREV=TRIGGERCONN	PAGE: 9 OF 10

TABLE OF CONTENTS

1...ROOT SHEET

2

2.1 MIDDLE BACKPLANE CONNECTOR

2.2 J3 BACKPLANE CONNECTOR

3...SNOBUS INTERFACE

4...DELAY REGISTER

5...CURRENT SUM FOR ENERGY TRIGGER

6...CURRENT SUM FOR 100 NS TRIGGER

6A TERMINATION FOR 100 NS TRIGGER SIGNAL

7...TERMINATION AND DELAY FOR 20 NS TRIGGER SIGNAL

7A TERMINATION AND SUM OF 20 NS TOP/BOTTOM TRIGGER SIGNAL
7B 20 NS TRIGGER DELAY RELAYS
7.B.1 20 NS DELAY
7.B.2 40 NS DELAY

8...TERMINATION AND SUM OF 20 NS TRIGGER SIGNAL

8A TERMINATION OF 20 NS SIGNAL AFTER DELAY

9 TERMINATION AND SUM OF OUTWARD LOOKING TUBE TRIGGER SIGNAL

10...CURRENT REFERENCE FOR 100 NS AND OWL TRIGGER SIGNAL

11...CURRENT REFERENCE FOR 20 NS TRIGGER SIGNAL

12...TERMINATION BLOCK FOR BACKPLANE SIGNALS

13...COMPARATOR FOR TRIGGER TESTS

14...LEDS FOR TRIGGER MONITORING

15...VOLTAGES

UNIVERSITY OF PENNSYLVANIA
HIGH ENERGY PHYSICS

TITLE:	DATE:
ENGINEER:	PAGE: