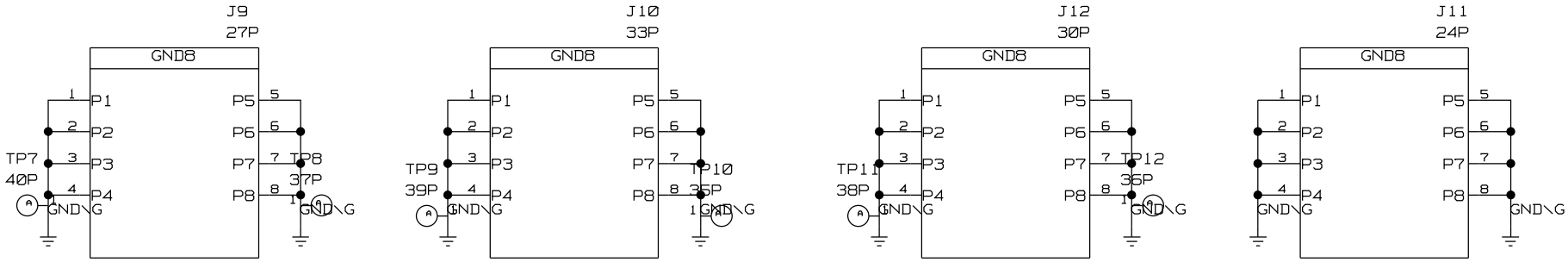

PUT TEST POINTS NEAR CLAMP HOLES
TO CONNECT THE HOLES TO GND IF NECESSARY

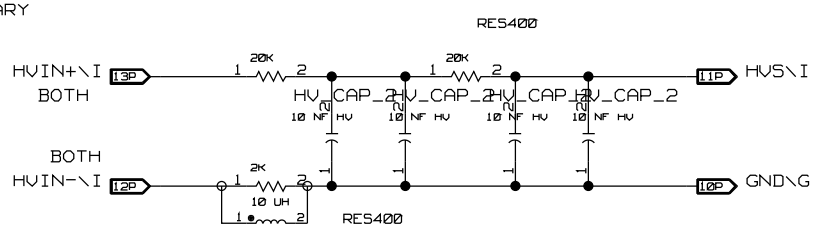

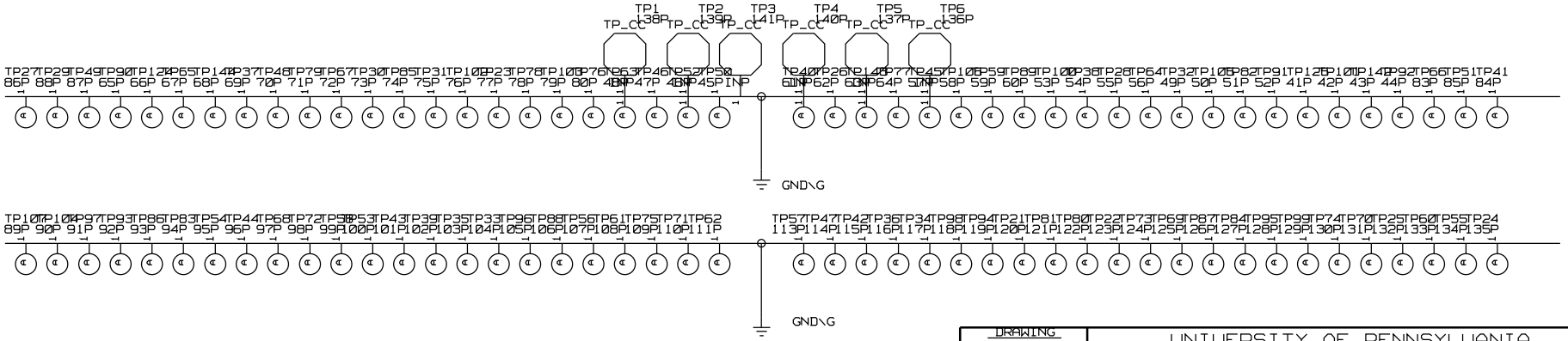

DRAWING	UNIVERSITY OF PENNSYLVANIA HIGH ENERGY PHYSICS	
	TITLE: HVC32HVS HVS LAST_MODIFIED=Mon Mar 24 11:33:46 1997	DATE: 5/95
	ENGINEER: DM RVB MN TT	PAGE: 10