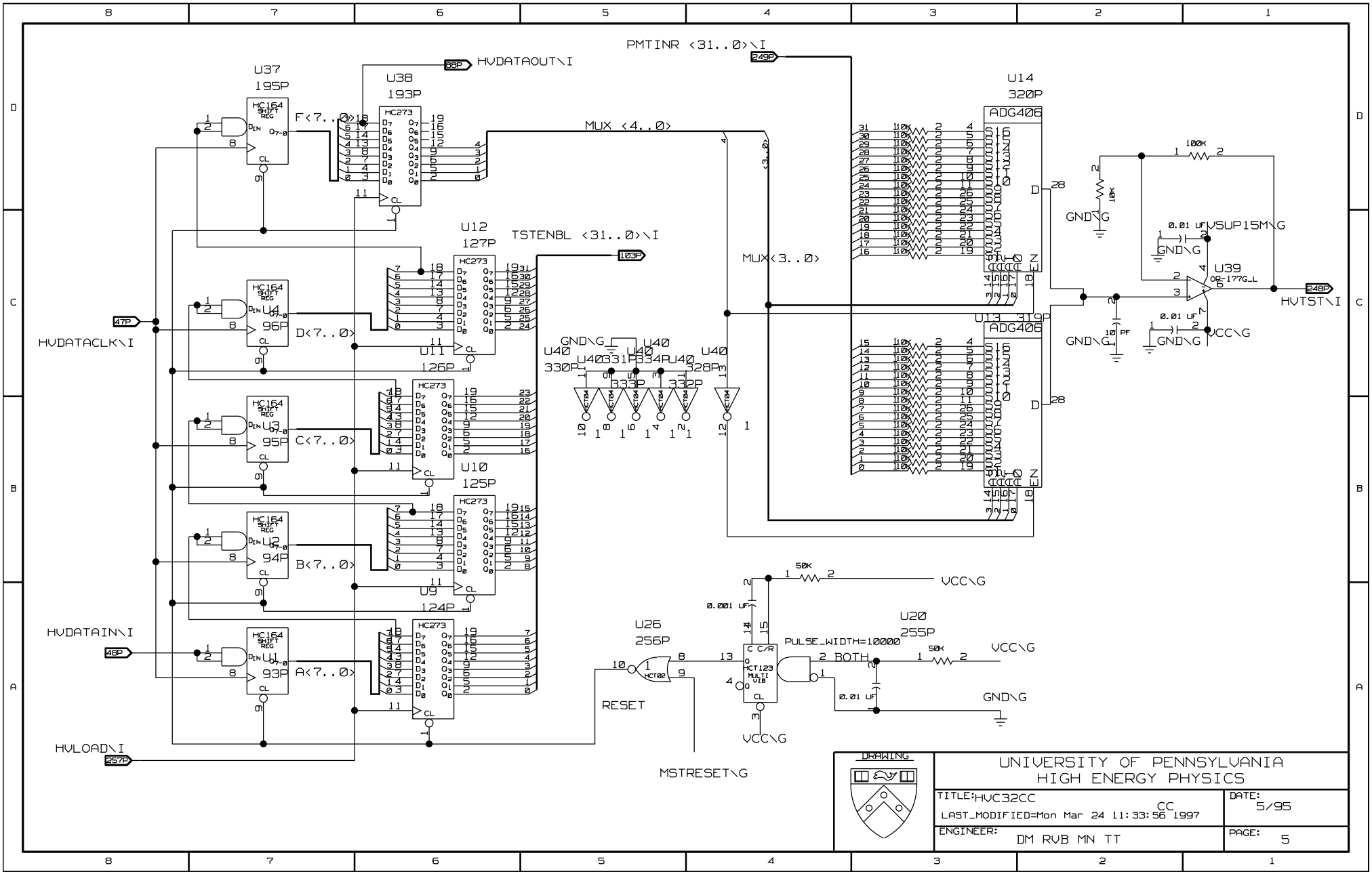
PMTINR <31..0>\I
249P
HVDATAOUT\I
38P
U37
195P
U38
193P
F<7..0>
MUX <4..0>
U14
320P
ADG406
U12
127P
TSTENBL <31..0>\I
103P
MUX<3..0>
U13 319P
ADG406
100K
10K
GND\G
0.01 uF
VSUP15M\G
U39
OP-177G_L
248P
HVTST\I
VCC\G
47P
HVDATACLK\I
U4
96P
D<7..0>
U11
126P
GND\G
U40
330P
U40331P
U40334P
U40328P
U40332P
U40333P
U3
95P
C<7..0>
U10
125P
U2
94P
B<7..0>
U9
124P
HVDATAIN\I
48P
U1
93P
A<7..0>
HVLOAD\I
257P
U26
256P
RESET
MSTRESET\G
50K
VCC\G
0.001 uF
U20
255P
PULSE_WIDTH=10000
2 BOTH
0.01 uF
GND\G
VCC\G
DRAWING
UNIVERSITY OF PENNSYLVANIA
HIGH ENERGY PHYSICS
TITLE:HVC32CC
CC
LAST_MODIFIED=Mon Mar 24 11:33:56 1997
DATE:
5/95
ENGINEER:
DM RVB MN TT
PAGE:
5