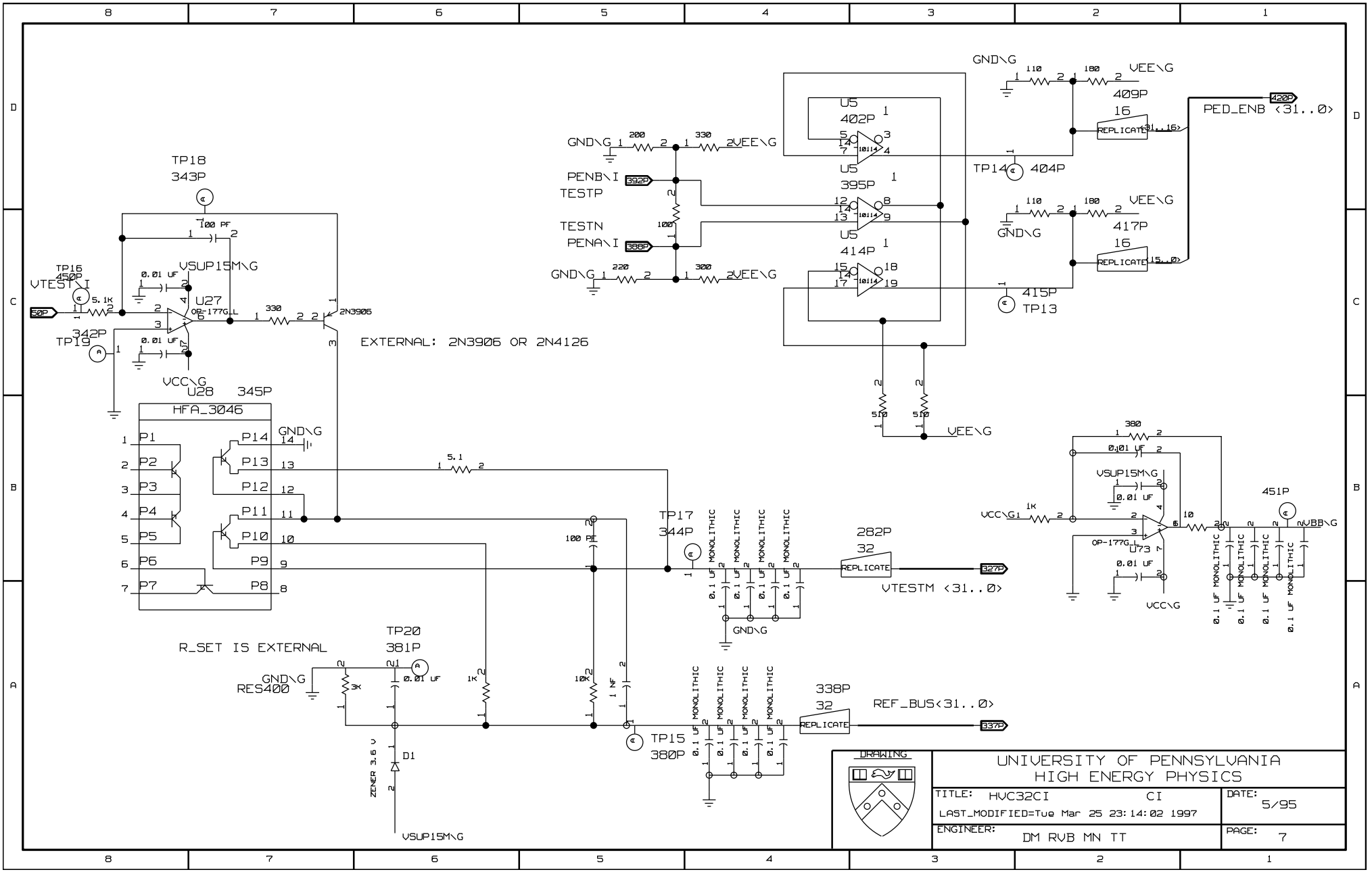

TP18
343P
100 PF
TP16
450P
VTEST\I
5.1K
50P
0.01 UF
VSUP15M\G
U27
OP-177G_L
330
2N3906
342P
TP19
VCC\G
U28
345P
HFA_3046
EXTERNAL: 2N3906 OR 2N4126
GND\G
5.1
100 PF
TP17
344P
MONOLITHIC
0.1 UF
282P
32
REPLICATE
327P
VTESTM <31..0>
R_SET IS EXTERNAL
TP20
381P
RES400
3K
1K
10K
1 NF
D1
ZENER 3.6 V
VSUP15M\G
TP15
380P
338P
REF_BUS<31..0>
337P
U5
402P
395P
414P
PENB\I
392P
TESTP
TESTN
PENA\I
388P
200
330
220
300
VEE\G
TP14
404P
415P
TP13
510
110
180
409P
417P
16
REPLICATE
<31..16>
<15..0>
420P
PED_ENB <31..0>
380
0.01 UF
VSUP15M\G
VCC\G
U73
OP-177G_L
10
451P
VBB\G
DRAWING
UNIVERSITY OF PENNSYLVANIA
HIGH ENERGY PHYSICS
TITLE: HVC32CI CI
LAST_MODIFIED=Tue Mar 25 23:14:02 1997
DATE: 5/95
ENGINEER: DM RVB MN TT
PAGE: 7