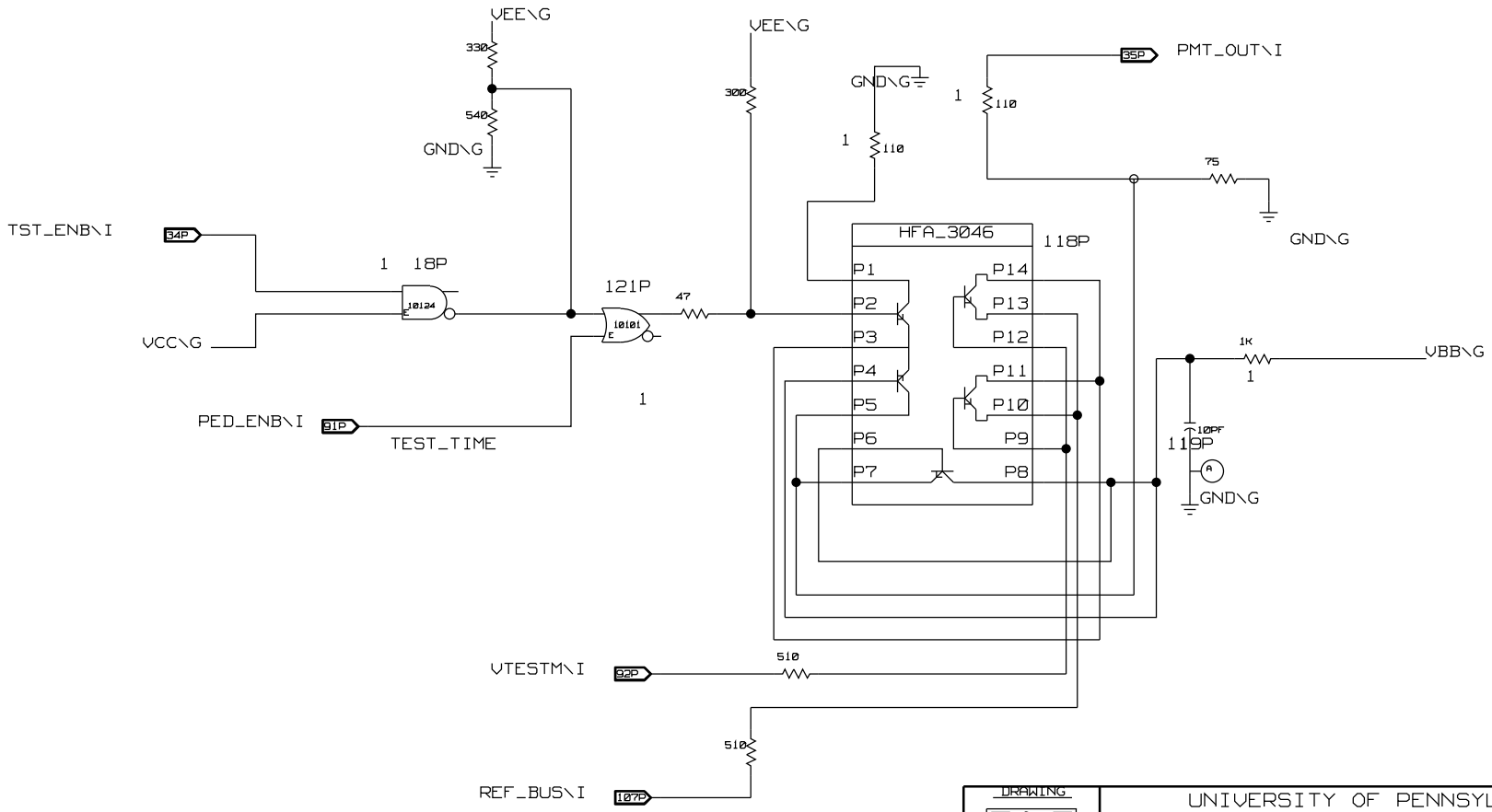

DRAWING

UNIVERSITY OF PENNSYLVANIA
HIGH ENERGY PHYSICS

TITLE: CHG_INJ CI
LAST_MODIFIED=Mon Mar 31 16:44:16 1997

DATE: 5/95

ENGINEER: DM RVB MN TT

PAGE: 8