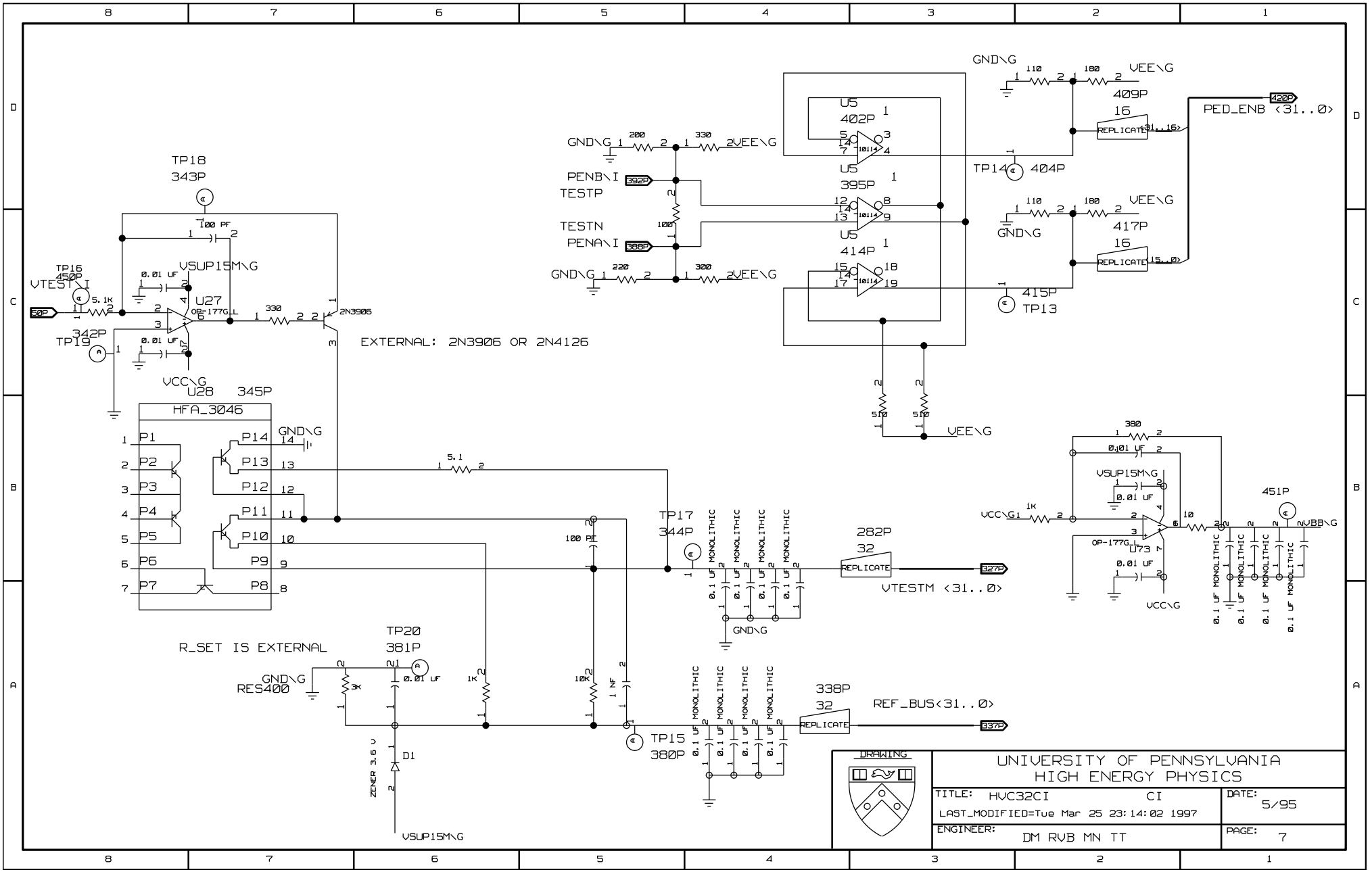

DRAWING

UNIVERSITY OF PENNSYLVANIA
HIGH ENERGY PHYSICS

TITLE: HVC32CI CI

LAST_MODIFIED=Tue Mar 25 23:14:02 1997

DATE: 5/95

ENGINEER: DM RVB MN TT

PAGE: 7