MASTER TRIGGER CARD/DIGITAL

TABLE OF CONTENTS

0 ROOT PAGE

1 VMECON (VME AND CONTROL REGISTERS)
- 1.A VMETRIG3 (VME INTERFACE)
  - 1.A.X XVMETRIG3 (XILINX VME INTERFACE)
- 1.B CONTROL (CONTROL REGISTERS FOR COUNTERS, GLOBAL_LOGIC, MEMORY, THRESHOLD MONITORING, CALIBRATION TRIGGERS)
- 1.C SERIAL (REGISTER FOR SERIAL DATA, CLOCKS)
- 1.D DAC_CONTROL (CONTROL REGISTERS FOR DACS)
- 1.E SOFTGT_CONTROL (SOFTWARE PULSED TRIGGER)
- 1.F MEM_RDADD (REGISTER FOR MEMORY READ ADDRESS)
- 1.F XILPROG_REG (REGISTER FOR XILINX PROGRAMMING)

2 COUNTERS
- 2.A COUNT10.LOGIC (10 MHZ COUNTER)
- 2.B COUNT50 (50 MHZ COUNTER)
- 2.C COUNTTG (GLOBAL TRIGGER COUNTER)
- 2.X XCOUNTSYNC (XILINX COUNTER LOAD/CLK SYNCRONIZER)

3 GLOBAL_LOGIC (GLOBAL TRIGGER LOGIC)
- 3.A GTWORD (GLOBAL TRIGGER MASK AND WORD)
- 3.B GTGEN (GENERATION OF GLOBAL TRIGGER)

4 CAL_TRIGGERS (TEST TIME ETC)
- 4.A PULSER3 (PULSE GENERATOR)
- 4.B DELPUL2 (PULSE DELAY)
- 4.C PRESCALE (PRESCALE OF LOW NHIT TRIGGER)

5 MEMORY
- 5.A FIFOS (PHYSICAL FIFO MEMORIES)
- 5.B MEMSIMM (SIMMS)
- 5.C MEMFIFO (FIFO CONTROL FOR WRITING TO DRAM SIMMS)
  - 5.C.X XMEMFIFO (XILINX MEMORY CONTROLLER)

6 THRESHMON (MONITOR OF TRIGGER THRESHOLDS)

7 VME_CONNECT(VME CONNECTORS)
- 7.B.I POWER_IN (INPUT VOLTAGES)

8 CONNS_LEDS (CONNECTORS AND LEDS)
- 8.A BNC_CONNECT (RAW/EXT TRIGS, LOCKOUT* CONNECTORS)
- 8.B DIGOUT_CONNECT (FANOUT, TIMEBUS, DAC CONTROL CONNECTOR)
- 8.C THRESH_CONNECT (TRIGGER THRESHOLDS CONNECTOR)
- 8.D ANALME_CONNECT (ANALOG MEASUREMENT CONNECTOR)
- 8.E LEDS

9 CLOCK (DIVISION OF 100MHZ CLOCK)

10 FANOUT (FANOUT OF PED, GTRIG, AND SYNCLRS)
- 10.A FANOUT_REG (PED AND GTRIG CRATE MASK REGISTERS)
- 10.B FANOUT_CONNS (FANOUT CONNECTORS)
- 10.C FANOUT_MASK

UNIVERSITY OF PENNSYLVANIA
HIGH ENERGY PHYSICS

TITLE:	DATE:
ENGINEER:	PAGE:

MASTER TRIGGER REGISTER LIST

WRITABLE REGISTERS

REG 0: CONTROL
REG 1: SERIAL
REG 2: DAC_CNT
REG 3: SOFT_GT
REG 4: PWID (PEDESTAL WIDTH)
REG 5: RTDEL (100MHZ PULSE DELAY)
REG 6: ADDEL (AD9500 DELAY)
REG 7: NOT USED
REG 8: PMSK (PEDESTAL CRATE MASK)
REG 9: SCALE (PRESCALER)
REG 10: NOT USED
REG 11: BBA (MEMORY READ ADDRESS)
REG 12: GT_LOCK (LOCKOUT WIDTH)
REG 13: MASK (GLOBAL TRIGGER MASK)
REG 14: XILPROG_REG
REG 15: GMSK (GLOBAL TRIGGER CRATE MASK)
REG 16: NOT USED
REG 17: NOT USED
REG 18: NOT USED
REG 19: NOT USED
REG 20: NOT USED
REG 21..31: AVAILABLE

READABLE REGISTERS

REG 0: CONTROL
REG 1: SERIAL
REG 2: DAC_CNT
REG 3: NOT USED
REG 4: PWID (PEDESTAL WIDTH)
REG 5: RTDEL (100MHZ PULSE DELAY)
REG 6: ADDEL (AD9500 DELAY)
REG 7: THRESHMON
REG 8: PMSK (PEDESTAL CRATE MASK)
REG 9: SCALE (PRESCALER)
REG 10: BWR_ADD_OUT
REG 11: BBA (MEMORY READ ADDRESS)
REG 12: GT_LOCK (LOCKOUT WIDTH)
REG 13: MASK (GLOBAL TRIGGER MASK)
REG 14: XILPROG_REG
REG 15: GMSK (GLOBAL TRIGGER CRATE MASK)
REG 16: OCGT (BITS 0 TO 23)
REG 17: C50 (BITS 0 TO 31)
REG 18: C50 (BITS 32 TO 42)
REG 19: C10 (BITS 0 TO 31)
REG 20: C10 (BITS 32 TO 52)
REG 21..31: AVAILABLE

REGISTER 0 (CONTROL)

0	PED_EN
1	PULSE_EN
2	LOAD_ENPR
3	LOAD_ENPS
4	LOAD_ENPW
5	LOAD_ENLK
6	ASYNC_EN
7	RESYNC
8	TESTGT
9	TEST50
10	TEST10
11	LOAD_ENGT
12	LOAD_EN50
13	LOAD_EN10
14	TESTMEM1
15	TESTMEM2
16	FIFO_RESET
17	TMONSEL
18	TMON0
19	TMON1
20	TMON2
21	TMON2
22..31	AVAILABLE

REGISTER 2 (DAC_CNT)

0	DACDAT0
1	DACDAT1
2	DACDAT2
3	DACDAT3
4	DACDAT4
5	DACDAT5
6	DACDAT6
7	DACDAT7
8	DACDAT8
9	DACDAT9
10	DACDAT10
11	DACDAT11
12	DACDAT12
13	DACDAT13
14	DACSEL
15	DACCLK

REGISTER 1 (SERIAL)

0	SEN
1	SERDAT
2	SHFTCLKGT
3	SHFTCLK50
4	SHFTCLK10
5	SHFTCLKPS

REGISTER 14 (XILPROG_REG)

0	SDIN
1	CCLK
2	DNPR*
3	PROG_EN
4	PROGRAM*

UNIVERSITY OF PENNSYLVANIA
HIGH ENERGY PHYSICS

TITLE: REGLIST
DATE:
ENGINEER:
PAGE:

MASTER TRIGGER DATA STREAM

DATIN<191..0>

119..0 COUNTERS <119..0>

52..0	BC10<52..0>
95..53	BC50<42..0>
119..96	BCGT<23..0>

146..120 GTWORD<26..0>

120	NHIT_100_LO
121	NHIT_100_MED
122	NHIT_100_HI
123	NHIT_20
124	NHIT_20_LB
125	ESUM_LO
126	ESUM_HI
127	OWLN
128	OWLE_LO
129	OWLE_HI
130	PULSE_GT
131	PRESCALE
132	PEDESTAL
133	PONG
134	SYNC
135	EXT_ASYNC
142..136	EXT<8..2>
143	SPECIAL_RAW
144	NCD
145	SOFT_GT
146	MISS_TRIG

176..147 ANALOG_MEASUREMENT<29..0>

156..147	PEAK<9..0>
166..157	DIFF<9..0>
176..167	INT<9..0>

191..177 ERRBITS<14..0>

177	TESTGT* (GT COUNTER)
178	TEST50* (50MHZ COUNTER)
179	TEST10* (10MHZ COUNTER)
180	TESTMEM1 (MEMORY)
181	TESTMEM2 (MEMORY)
182	SYNCLR16 OCCURED
183	SYNCLR16 OCCURED W/O TC_16* OCCURING
184	SYNCLR24 OCCURED
185	SYNCLR24 OCCURED W/O TC_24* OCCURING
186	FIFOS DO NOT ALL HAVE SAME EMPTY STATUS
187	FIFOS DO NOT ALL HAVE SAME FULL STATUS
188	ALL FIFOS HAVE FF LOW (FIFOS ARE FULL)
189	NOT USED
190	NOT USED
191	NOT USED

CONNECTOR LIST

J1-2	VME EUROCONNS (96 PIN)
J3-7	SPARE FANOUT (10 PIN)
J8	ANALOG MEASUREMENT (34 PIN)
J9	DAC CONTROL (34 PIN)
J10-11	PLAY CONNECTORS (34 PIN)
J12-21	FANOUT TO CRATES 11-20 (10 PIN)
J22	TRIGGER THRESHOLDS (14 PIN)
J23-32	FANOUT TO CRATES 1-10 (10 PIN)

TIMEBUS<7..0>

0	SYNCLR24L
1	SYNCLR24H
2	SYNCLRL
3	SYNCLRH
4	GTRIGL
5	GTRIGH
6	PEDL
7	PEDH

UNIVERSITY OF PENNSYLVANIA
HIGH ENERGY PHYSICS

TITLE: DATALIST

DATE:

ENGINEER:

PAGE:

MASTER TRIGGER DATA STREAM

SIMM0

31	30	29	28	27	26	25	24	23	22	21	20	19	18	17	16	15	14	13	12	11	10	9	8	7	6	5	4	3	2	1	0
10 MHZ GLOBAL TRIGGER ID <31..0>																															

SIMM1

31	30	29	28	27	26	25	24	23	22	21	20	19	18	17	16	15	14	13	12	11	10	9	8	7	6	5	4	3	2	1	0
50 MHZ GLOBAL TRIGGER ID <10..0>												10 MHZ GLOBAL TRIGGER ID <52..32>																			

SIMM2

31	30	29	28	27	26	25	24	23	22	21	20	19	18	17	16	15	14	13	12	11	10	9	8	7	6	5	4	3	2	1	0
50 MHZ GLOBAL TRIGGER ID <42..11>																															

SIMM3

31	30	29	28	27	26	25	24	23	22	21	20	19	18	17	16	15	14	13	12	11	10	9	8	7	6	5	4	3	2	1	0
OWLN	ESUM_HI	ESUM_LO	NHIT_20_LB	NHIT_20	NHIT_100_HI	NHIT_100_MED	NHIT_100_LO	GLOBAL TRIGGER COUNT ID <23..0>																							

SIMM4

31	30	29	28	27	26	25	24	23	22	21	20	19	18	17	16	15	14	13	12	11	10	9	8	7	6	5	4	3	2	1	0
DIFF<2..0>				PEAK<9..0>								MISS_TRIG	SOFT_GT	NCD	SPECIAL_RAW	EXT8	EXT7	EXT6	EXT5	EXT4	EXT3	EXT2	EXT_ASYNC	SYNC	PONG	PEDESTAL	PRESCALE	PULSE_GT	OWLE_HI	OWLE_LO

SIMM5

31	30	29	28	27	26	25	24	23	22	21	20	19	18	17	16	15	14	13	12	11	10	9	8	7	6	5	4	3	2	1	0
NOT USED	NOT USED	NOT USED	ALL FIFOS HAVE FF LOW	FIFOS W/O ALL SAME FF	FIFOS W/O ALL SAME EF	SYNCLR24 OCCURED W/O TC_24*	SYNCLR24 OCCURED	SYNCLR16 OCCURED W/O TC_16*	SYNCLR16 OCCURED	TESTMEM2	TESTMEM1	TEST10*	TEST50*	TESTGT*	INT<9..0>										DIFF<9..3>						

UNIVERSITY OF PENNSYLVANIA
HIGH ENERGY PHYSICS

TITLE: SIMMLIST	DATE:
ENGINEER:	PAGE:

MASTER TRIGGER CARD/DIGITAL

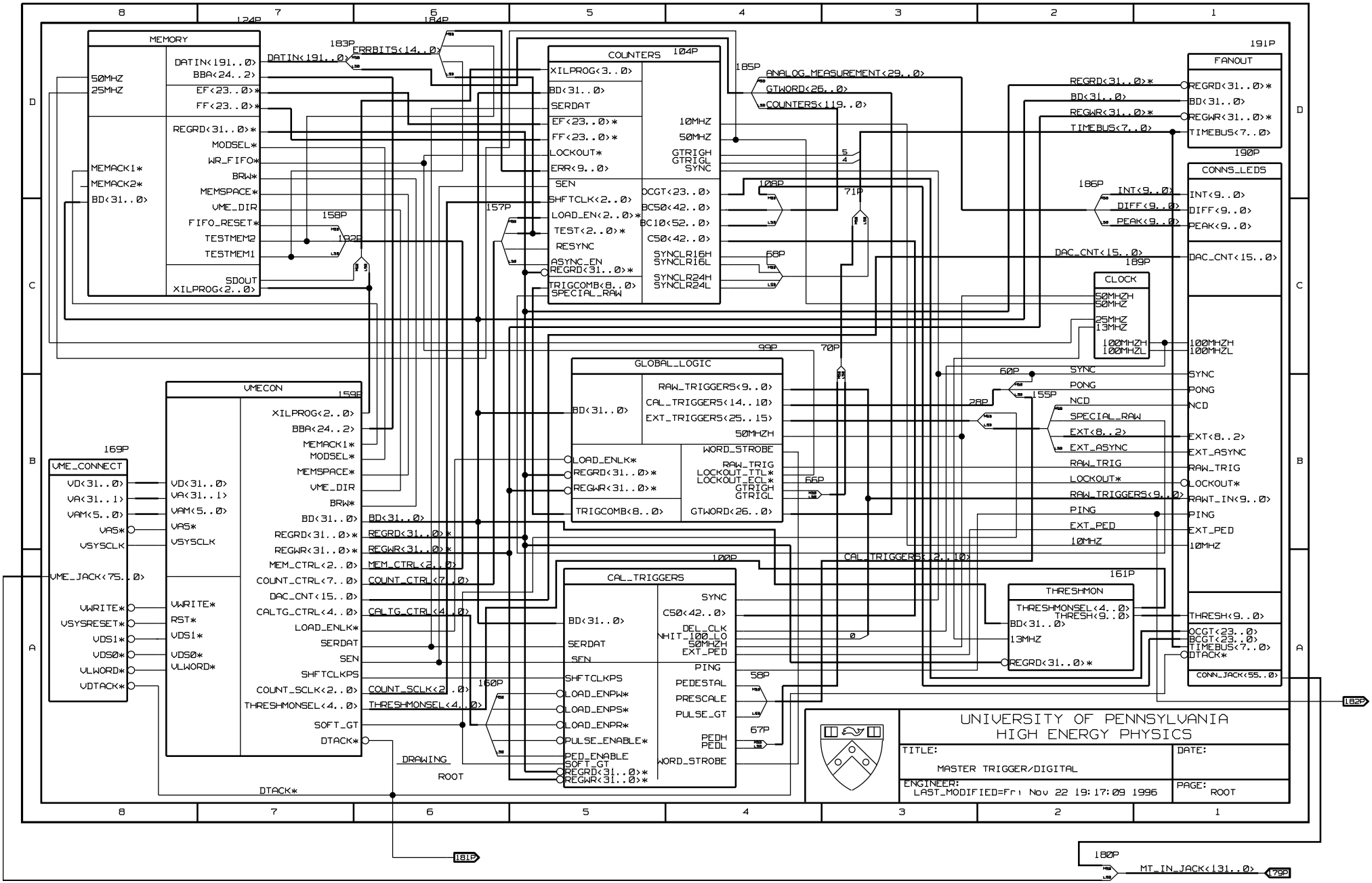

VME CONTROL 1

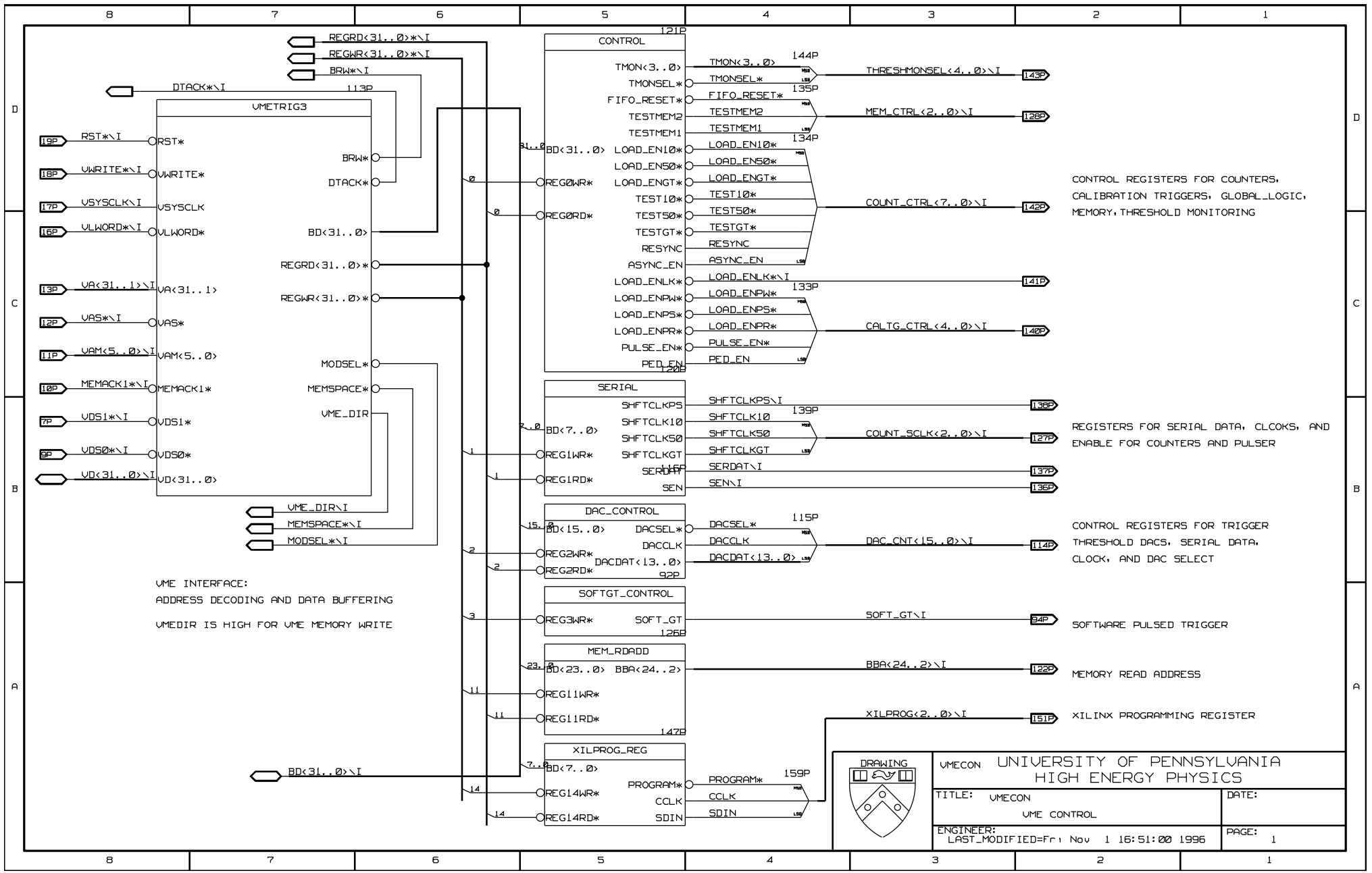

VME INTERFACE

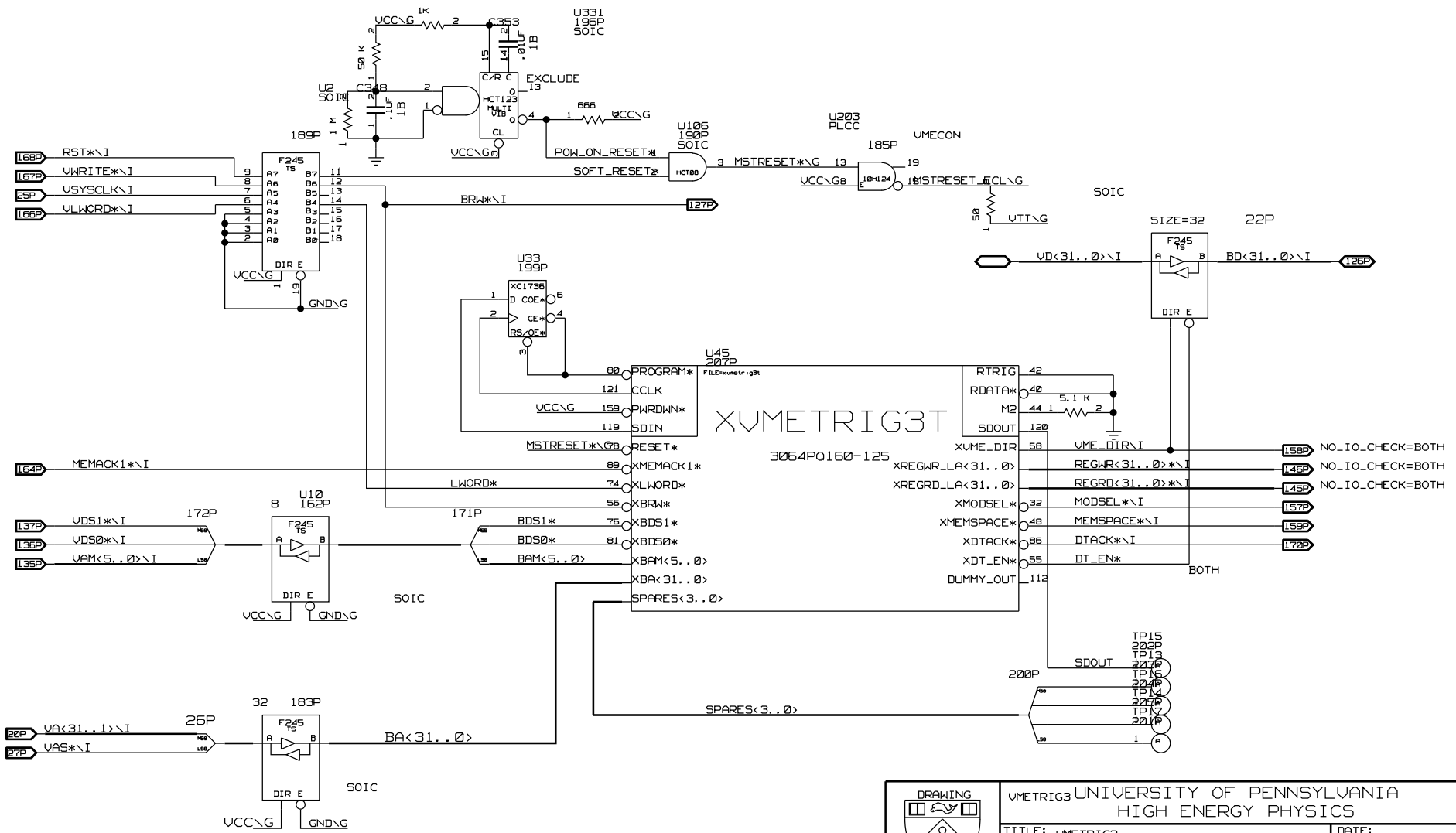

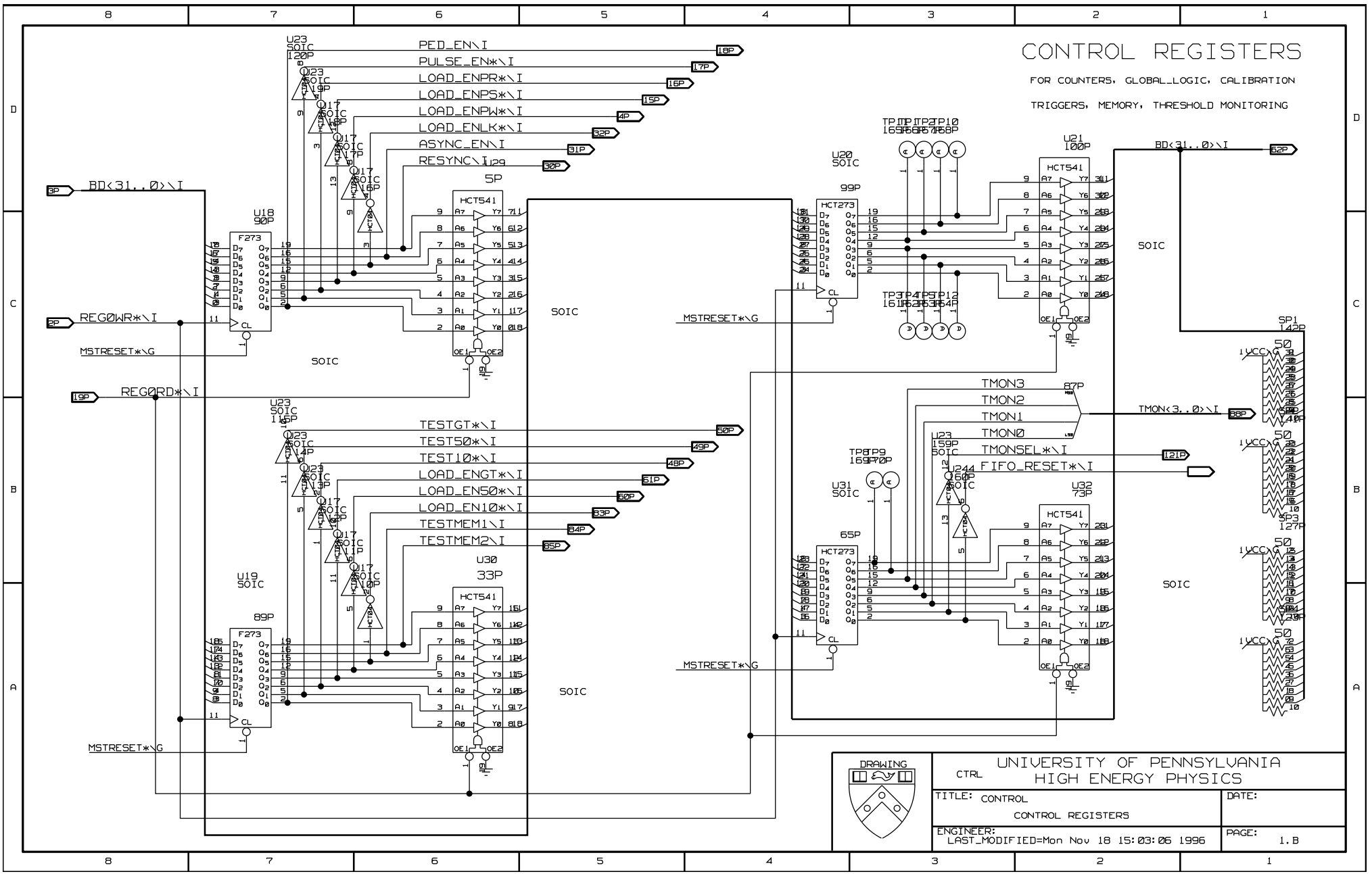
CONTROL REGISTERS
FOR COUNTERS, GLOBAL_LOGIC, CALIBRATION
TRIGGERS, MEMORY, THRESHOLD MONITORING
BD<31..0>\I
REG0WR*\I
REG0RD*\I
MSTRESET*\G
PED_EN\I
PULSE_EN*\I
LOAD_ENPR*\I
LOAD_ENPS*\I
LOAD_ENPW*\I
LOAD_ENLK*\I
ASYNC_EN\I
RESYNC\I
TESTGT*\I
TEST50*\I
TEST10*\I
LOAD_ENGT*\I
LOAD_EN50*\I
LOAD_EN10*\I
TESTMEM1\I
TESTMEM2\I
TMON3
TMON2
TMON1
TMON0
TMONSEL*\I
FIFO_RESET*\I
TMON<3..0>\I
U18
U19
U20
U21
U23
U30
U31
U32
F273
HCT273
HCT541
HCT244
SOIC
DRAWING
UNIVERSITY OF PENNSYLVANIA
HIGH ENERGY PHYSICS
CTRL
TITLE: CONTROL
CONTROL REGISTERS
DATE:
ENGINEER:
LAST_MODIFIED=Mon Nov 18 15:03:06 1996
PAGE: 1.B

SERIAL REGISTER

ENABLES, SHIFT CLOCKS, SERIAL DATA

FOR COUNTERS AND PULSER FREQUENCY

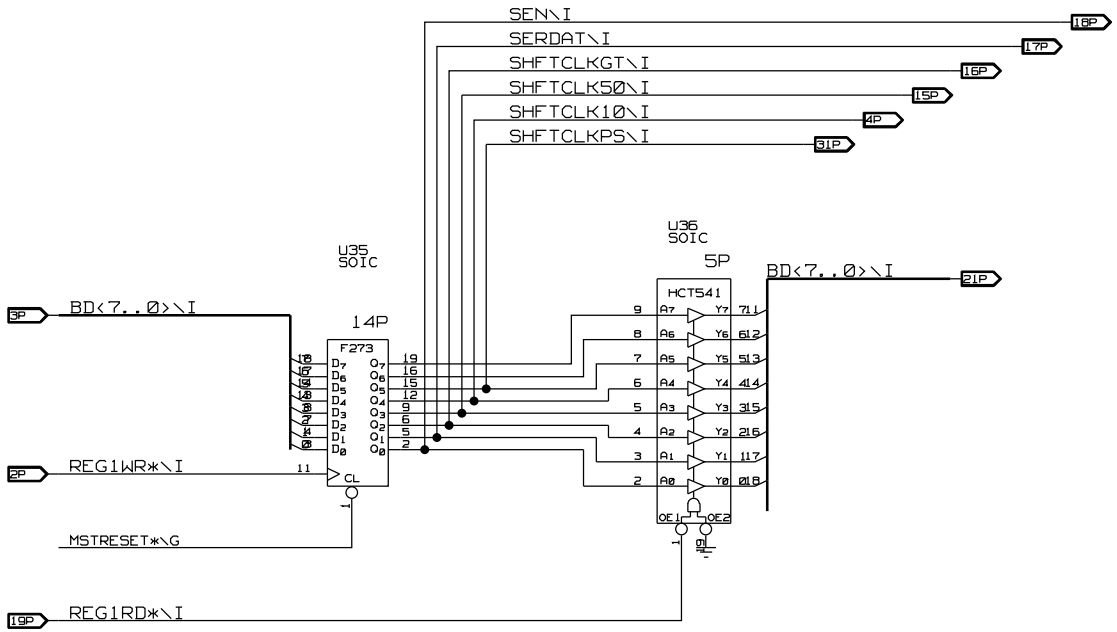

DRAWING SER	UNIVERSITY OF PENNSYLVANIA HIGH ENERGY PHYSICS	
TITLE: SERIAL SERIAL REGISTER		DATE:
ENGINEER: LAST_MODIFIED=Mon Nov 18 15:03:03 1996		PAGE: 1.C

DAC CONTROL REGISTERS

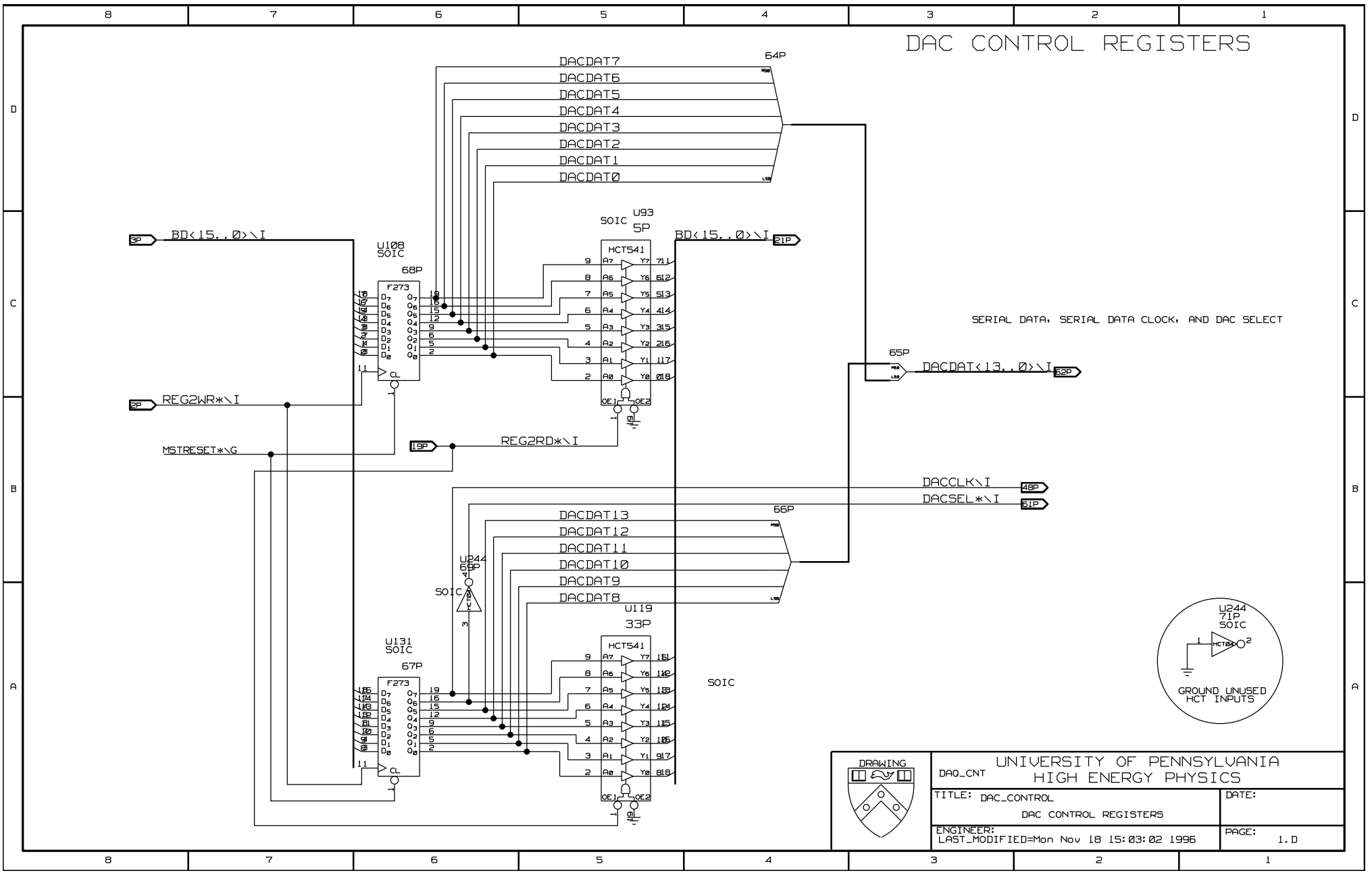

SOFTWARE PULSED TRIGGER

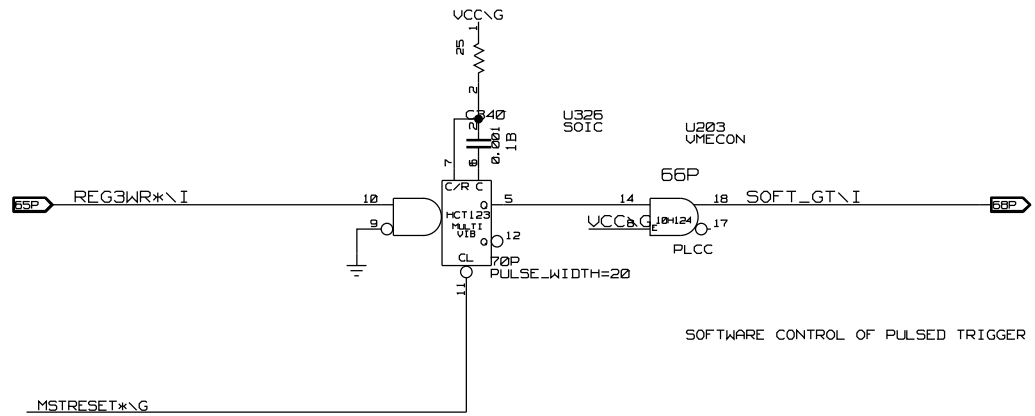

DRAWING	UNIVERSITY OF PENNSYLVANIA SOFTGT_CNT HIGH ENERGY PHYSICS	
	TITLE: SOFTGT_CONTROL SOFT GT GENERATOR	DATE:
	ENGINEER: LAST_MODIFIED=Mon Nov 18 15:03:11 1996	PAGE: 1.E

MEM_RDADD 1.F

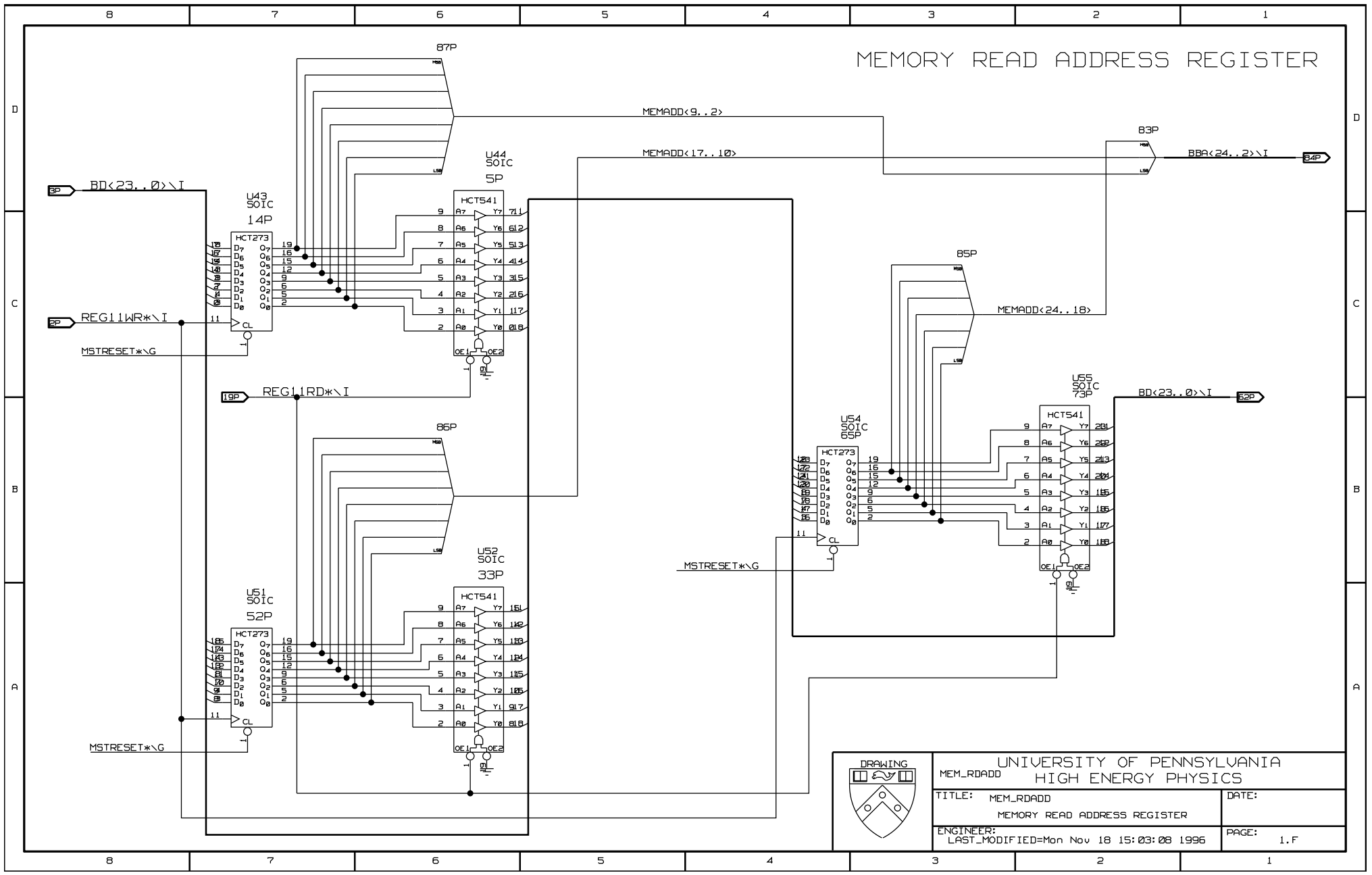
MEMORY READ ADDRESS REGISTER
87P
MEMADD<9..2>
MEMADD<17..10>
83P
BBA<24..2>\I
84P
U44
SOIC
5P
HCT541
U43
SOIC
14P
HCT273
BD<23..0>\I
3P
REG11WR*\I
2P
MSTRESET*\G
REG11RD*\I
19P
85P
MEMADD<24..18>
U55
SOIC
73P
BD<23..0>\I
62P
U54
SOIC
65P
86P
U52
SOIC
33P
U51
SOIC
52P
DRAWING
UNIVERSITY OF PENNSYLVANIA
HIGH ENERGY PHYSICS
MEM_RDADD
TITLE: MEM_RDADD
MEMORY READ ADDRESS REGISTER
DATE:
ENGINEER:
LAST_MODIFIED=Mon Nov 18 15:03:08 1996
PAGE: 1.F

XILINX PROGRAMMING REGISTER

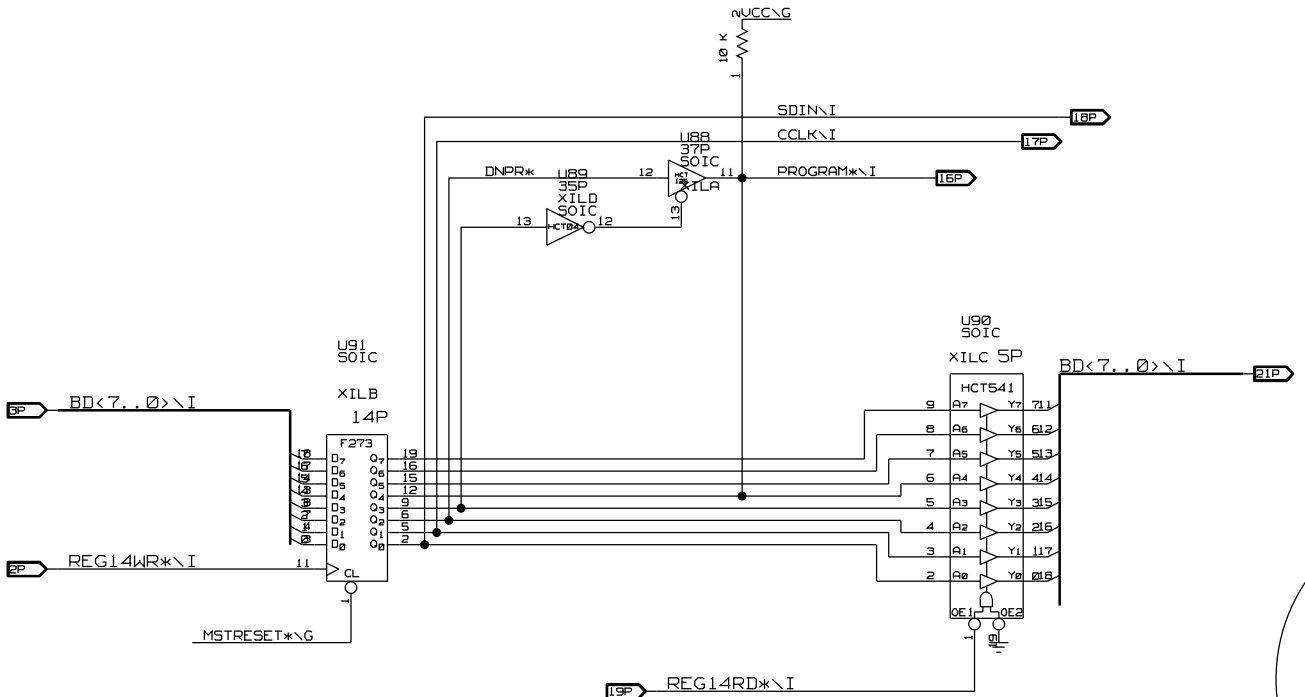

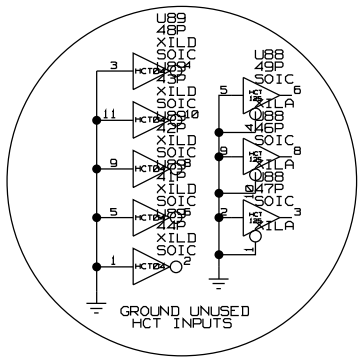

DRAWING	XILREG UNIVERSITY OF PENNSYLVANIA HIGH ENERGY PHYSICS	
	TITLE: XILPROG_REG XILINX PROGRAMMING REGISTER	DATE:
	ENGINEER: LAST_MODIFIED=Mon Nov 18 15:03:10 1996	PAGE: 1.G

COUNTERS 2

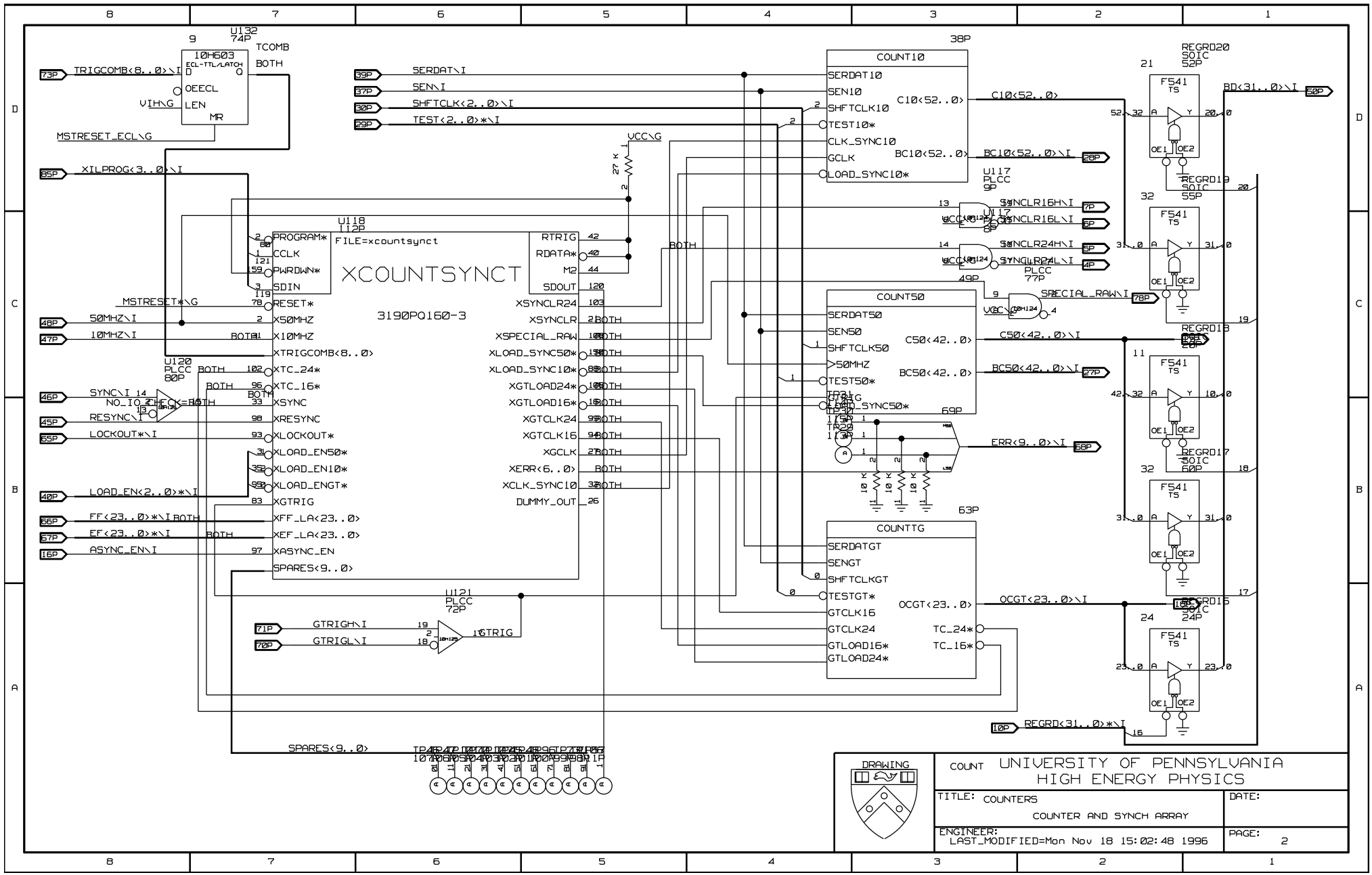
U132
74P
10H603
ECL-TTL/LATCH
TCOMB
BOTH
TRIGCOMB<8..0>\I
OEECL
VIH\G
LEN
MR
MSTRESET_ECL\G
XILPROG<3..0>\I
SERDAT\I
SEN\I
SHFTCLK<2..0>\I
TEST<2..0>*\I
VCC\G
27 K
U118
112P
PROGRAM*
CCLK
PWRDWN*
SDIN
FILE=xcountsynct
XCOUNTSYNCT
3190PQ160-3
RTRIG
RDATA*
M2
SDOUT
XSYNCLR24
XSYNCLR
XSPECIAL_RAW
XLOAD_SYNC50*
XLOAD_SYNC10*
XGTLOAD24*
XGTLOAD16*
XGTCLK24
XGTCLK16
XGCLK
XERR<6..0>
XCLK_SYNC10
DUMMY_OUT
MSTRESET*\G
50MHZ\I
10MHZ\I
RESET*
X50MHZ
X10MHZ
XTRIGCOMB<8..0>
U120
PLCC
80P
XTC_24*
XTC_16*
SYNC\I
NO_IO_CHECK
XSYNC
RESYNC\I
XRESYNC
LOCKOUT*\I
XLOCKOUT*
XLOAD_EN50*
XLOAD_EN10*
XLOAD_ENGT*
LOAD_EN<2..0>*\I
XGTRIG
FF<23..0>*\I
XFF_LA<23..0>
EF<23..0>*\I
XEF_LA<23..0>
ASYNC_EN\I
XASYNC_EN
SPARES<9..0>
U121
PLCC
72P
GTRIGH\I
GTRIGL\I
GTRIG
SPARES<9..0>
38P
COUNT10
SERDAT10
SEN10
SHFTCLK10
TEST10*
CLK_SYNC10
GCLK
LOAD_SYNC10*
C10<52..0>
BC10<52..0>
U117
PLCC
9P
SYNCLR16H\I
SYNCLR16L\I
SYNCLR24H\I
SYNCLR24L\I
49P
COUNT50
SERDAT50
SEN50
SHFTCLK50
50MHZ
TEST50*
LOAD_SYNC50*
C50<42..0>
BC50<42..0>
SPECIAL_RAW\I
69P
ERR<9..0>\I
63P
COUNTTG
SERDATGT
SENGT
SHFTCLKGT
TESTGT*
GTCLK16
GTCLK24
GTLOAD16*
GTLOAD24*
OCGT<23..0>
TC_24*
TC_16*
REGRD20
SOIC
52P
REGRD19
SOIC
55P
REGRD18
SOIC
60P
REGRD17
SOIC
60P
REGRD16
SOIC
24P
F541
TS
BD<31..0>\I
REGRD<31..0>*\I
DRAWING
COUNT
UNIVERSITY OF PENNSYLVANIA
HIGH ENERGY PHYSICS
TITLE: COUNTERS
COUNTER AND SYNCH ARRAY
DATE:
ENGINEER:
LAST_MODIFIED=Mon Nov 18 15:02:48 1996
PAGE: 2

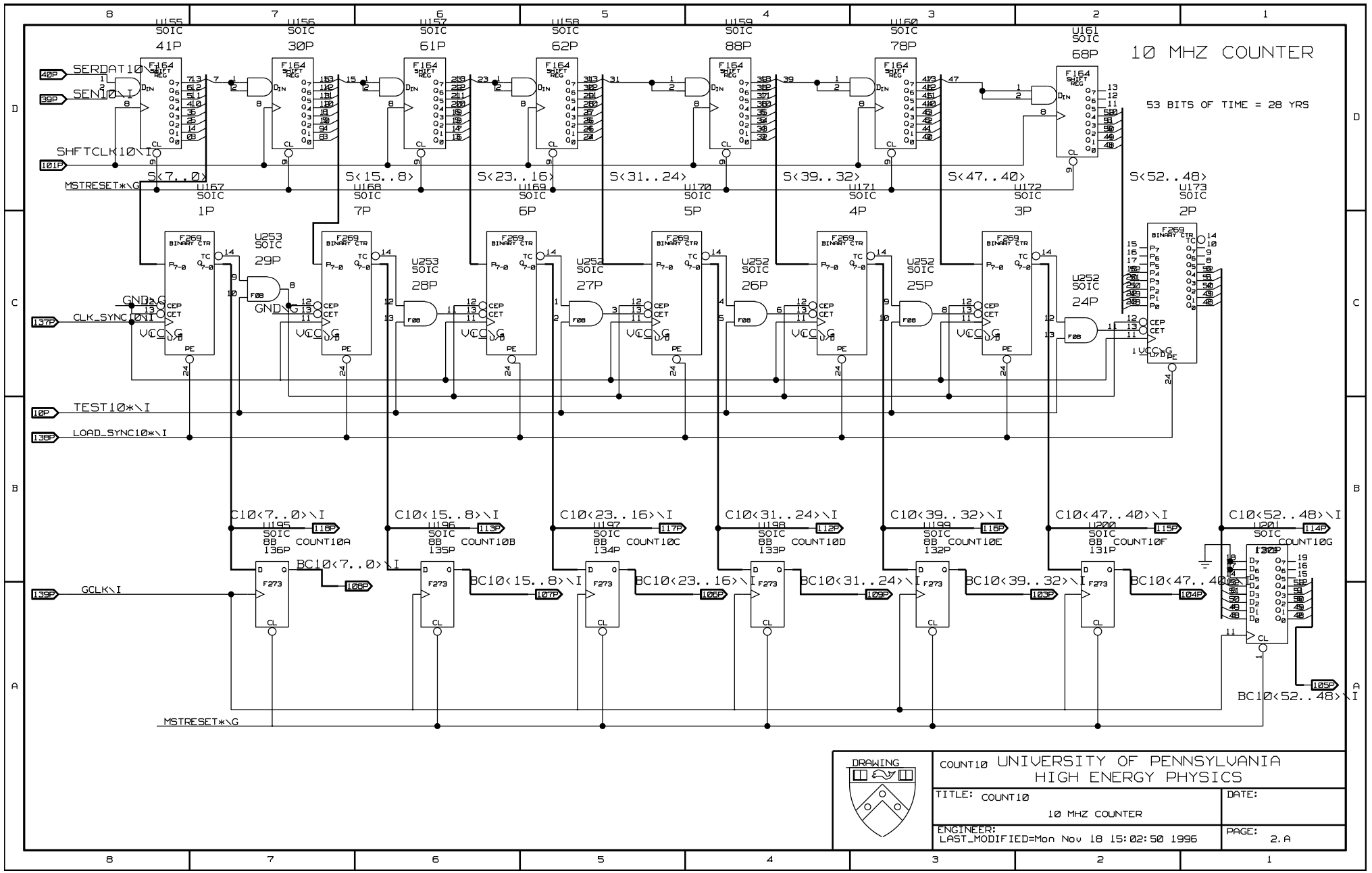
10 MHZ COUNTER
53 BITS OF TIME = 28 YRS
SERDAT10*\I
SENI0*\I
SHFTCLK10*\I
MSTRESET*\G
S<7..0>
S<15..8>
S<23..16>
S<31..24>
S<39..32>
S<47..40>
S<52..48>
CLK_SYNC10*\I
TEST10*\I
LOAD_SYNC10*\I
GCLK\I
C10<7..0>\I
C10<15..8>\I
C10<23..16>\I
C10<31..24>\I
C10<39..32>\I
C10<47..40>\I
C10<52..48>\I
BC10<7..0>\I
BC10<15..8>\I
BC10<23..16>\I
BC10<31..24>\I
BC10<39..32>\I
BC10<47..40>\I
BC10<52..48>\I
COUNT10A
COUNT10B
COUNT10C
COUNT10D
COUNT10E
COUNT10F
COUNT10G
DRAWING
COUNT10 UNIVERSITY OF PENNSYLVANIA
HIGH ENERGY PHYSICS
TITLE: COUNT10
10 MHZ COUNTER
DATE:
ENGINEER:
LAST_MODIFIED=Mon Nov 18 15:02:50 1996
PAGE:
2.A

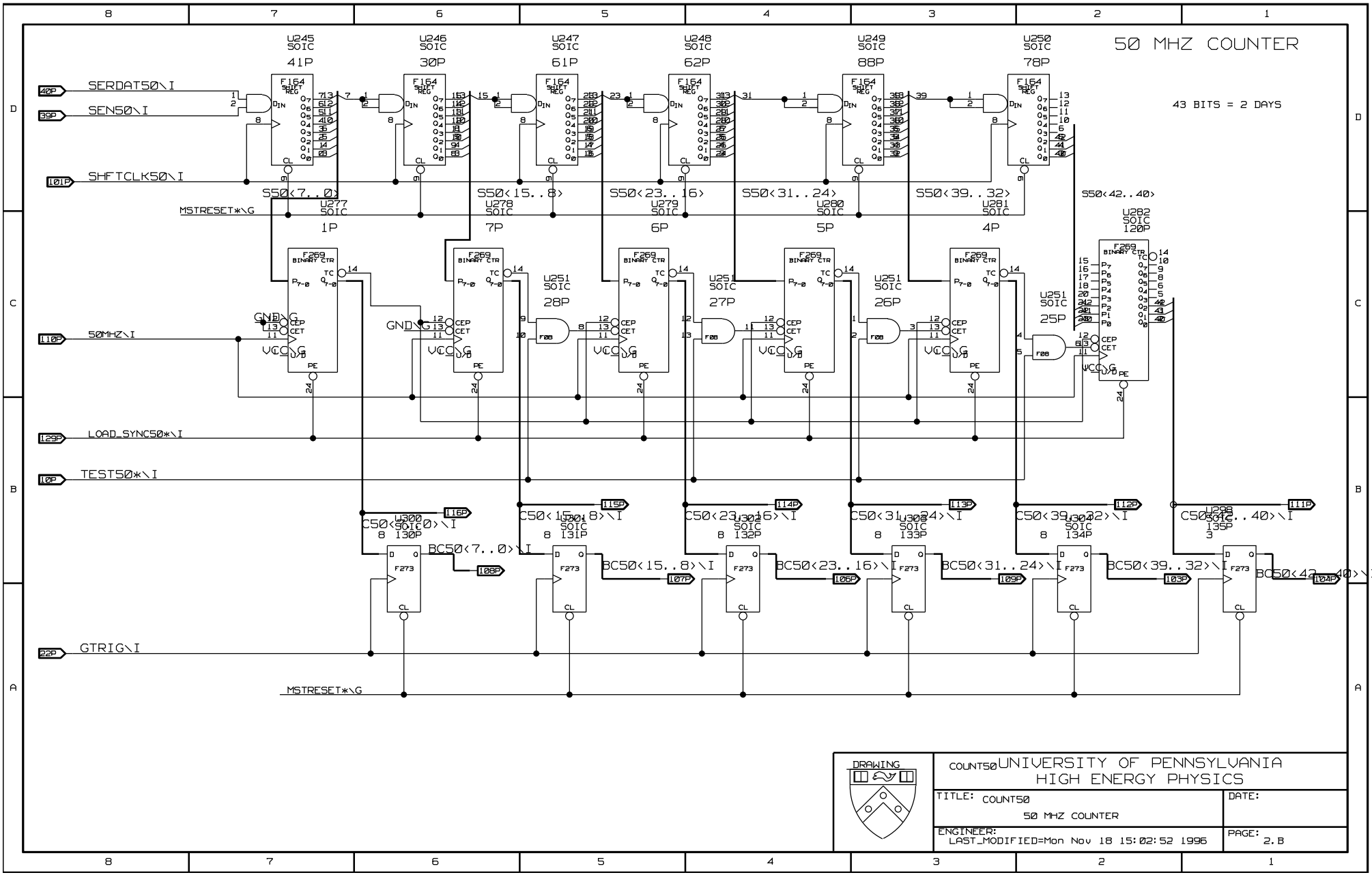

DRAWING

COUNT50 UNIVERSITY OF PENNSYLVANIA
HIGH ENERGY PHYSICS

TITLE: COUNT50
50 MHZ COUNTER

DATE:

ENGINEER:
LAST_MODIFIED=Mon Nov 18 15:02:52 1996

PAGE: 2.B

GLOBAL TRIGGER COUNTER

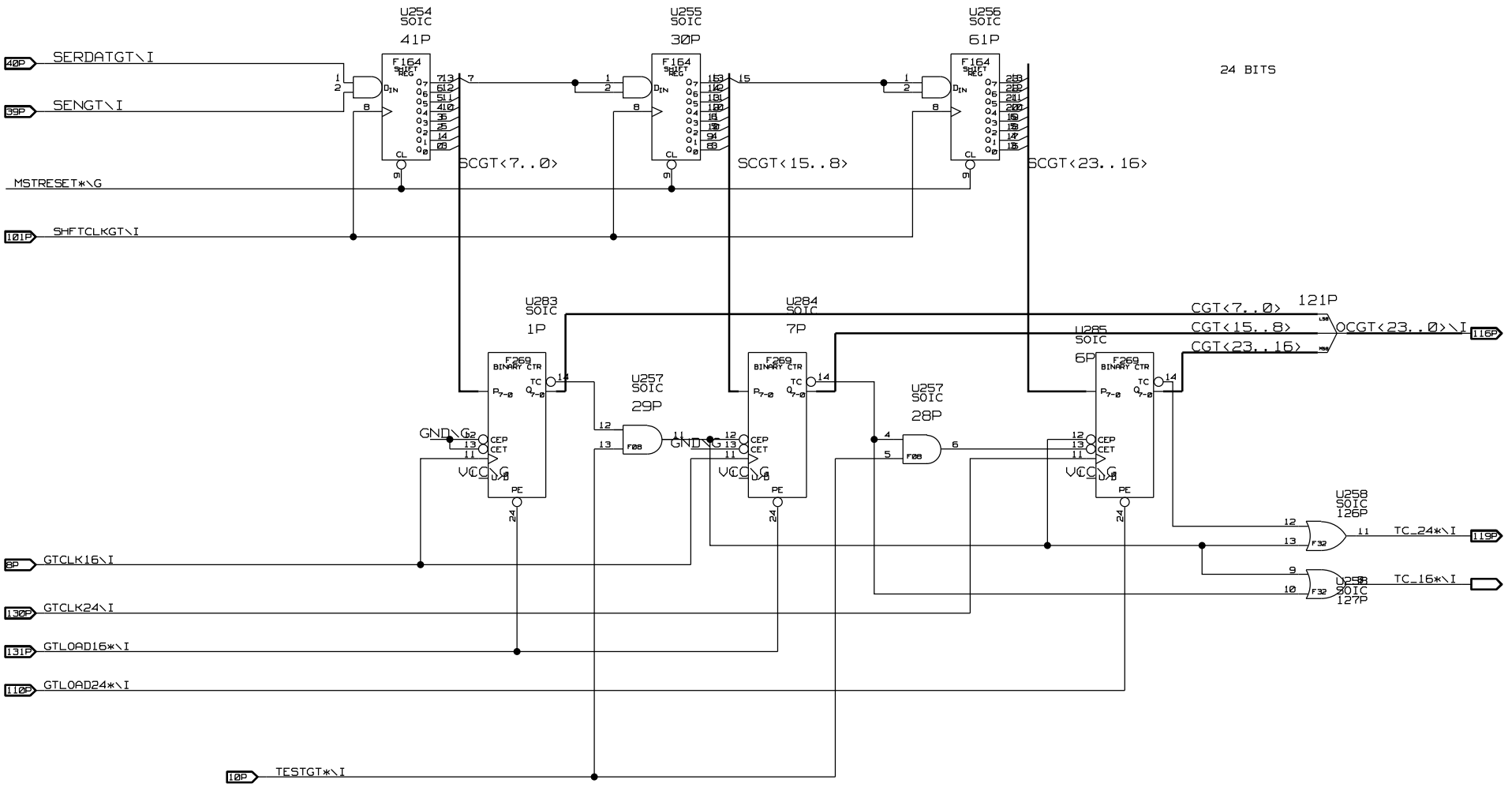

DRAWING

COUNTTG UNIVERSITY OF PENNSYLVANIA
HIGH ENERGY PHYSICS

TITLE: COUNTTG TRIGGER COUNTER	DATE:
ENGINEER: LAST_MODIFIED=Mon Nov 18 15:02:53 1996	PAGE: 2.C

GLOBAL_LOGIC 3

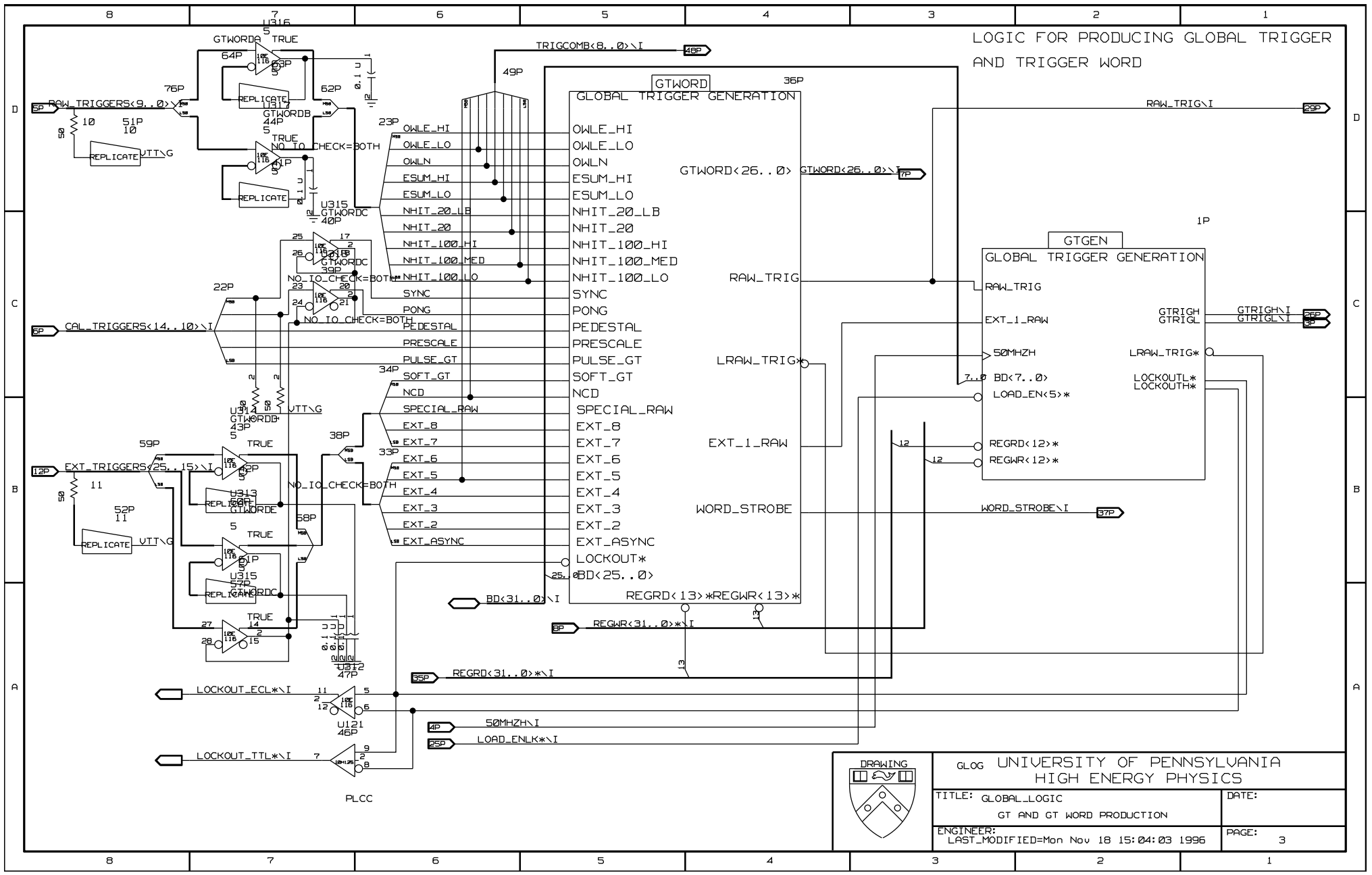

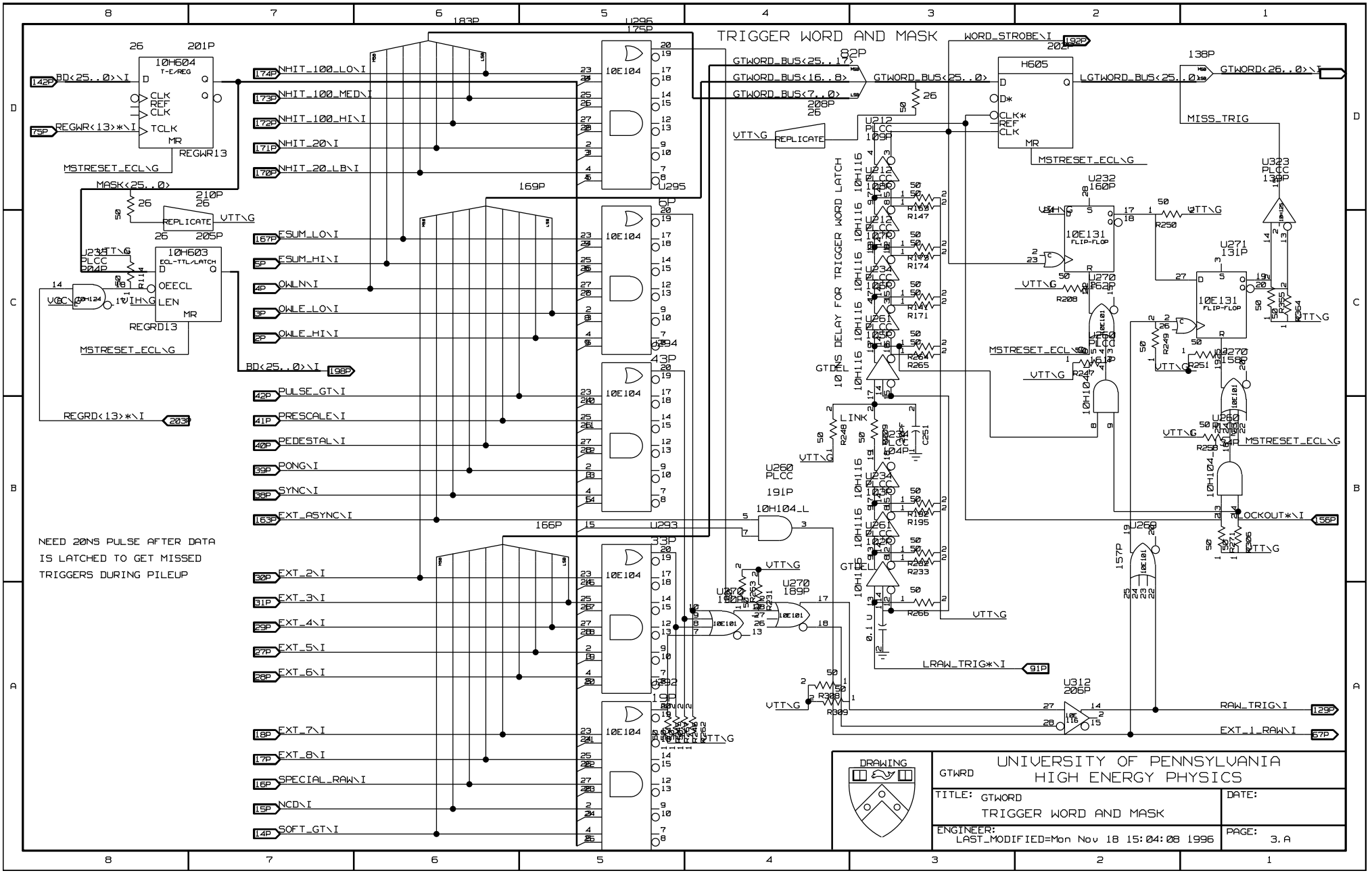
TRIGGER WORD AND MASK
10H604
T-E/REG
REGWR13
10H603
ECL-TTL/LATCH
REGRD13
MSTRESET_ECL\G
MASK<25..0>
REPLICATE
VTT\G
BD<25..0>\I
REGWR<13>*\I
REGRD<13>*\I
NHIT_100_LO\I
NHIT_100_MED\I
NHIT_100_HI\I
NHIT_20\I
NHIT_20_LB\I
ESUM_LO\I
ESUM_HI\I
OWLN\I
OWLE_LO\I
OWLE_HI\I
PULSE_GT\I
PRESCALE\I
PEDESTAL\I
PONG\I
SYNC\I
EXT_ASYNC\I
EXT_2\I
EXT_3\I
EXT_4\I
EXT_5\I
EXT_6\I
EXT_7\I
EXT_8\I
SPECIAL_RAW\I
NCD\I
SOFT_GT\I
10E104
GTWORD_BUS<25..17>
GTWORD_BUS<16..8>
GTWORD_BUS<7..0>
GTWORD_BUS<25..0>
WORD_STROBE\I
H605
LGTWORD_BUS<25..0>
GTWORD<26..0>\I
MISS_TRIG
10E131
FLIP-FLOP
10H116
10NS DELAY FOR TRIGGER WORD LATCH
GTDEL
LINK
10H104_L
LRAW_TRIG*\I
RAW_TRIG\I
EXT_1_RAW\I
CLOCKOUT*\I
NEED 20NS PULSE AFTER DATA
IS LATCHED TO GET MISSED
TRIGGERS DURING PILEUP
DRAWING
GTWRD
UNIVERSITY OF PENNSYLVANIA
HIGH ENERGY PHYSICS
TITLE: GTWORD
TRIGGER WORD AND MASK
DATE:
ENGINEER:
LAST_MODIFIED=Mon Nov 18 15:04:08 1996
PAGE: 3.A

GENERATION OF GLOBAL TRIGGER

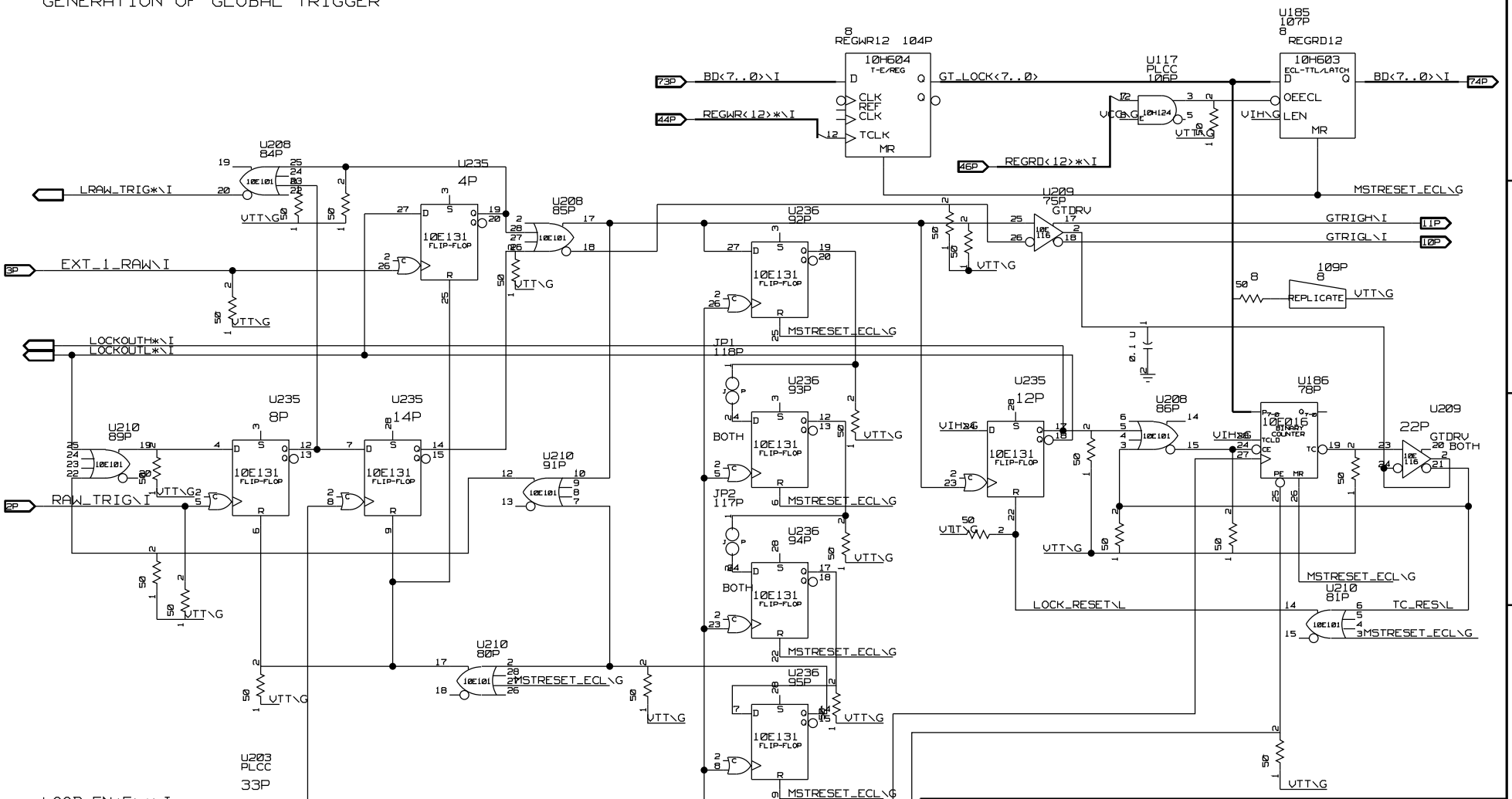

CAL_TRIGGERS 4

GENERATION OF TIMING AND ELECTRONICS CALIBRATION TRIGGERS

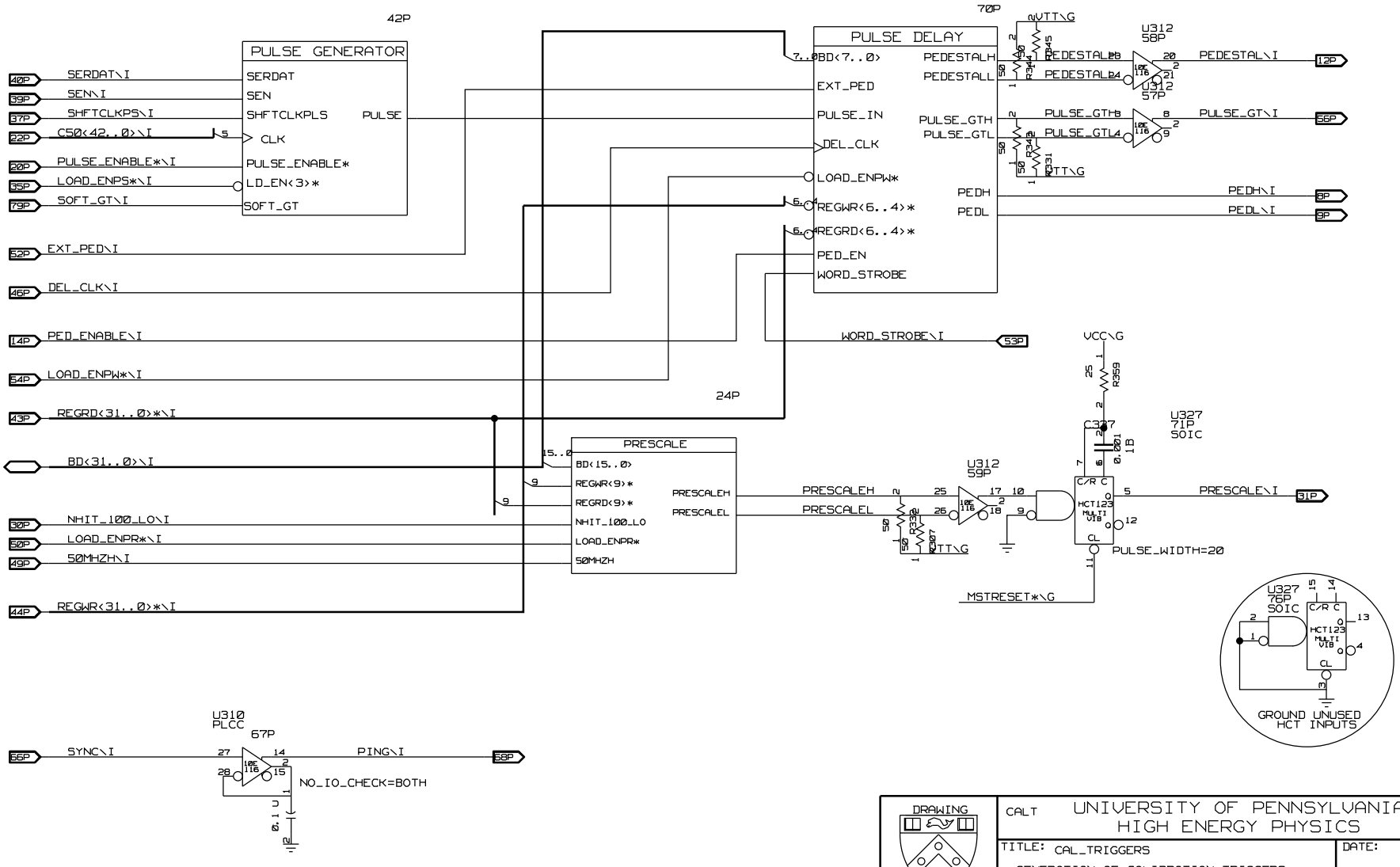

DRAWING	CALT UNIVERSITY OF PENNSYLVANIA HIGH ENERGY PHYSICS	
	TITLE: CAL_TRIGGERS GENERATION OF CALIBRATION TRIGGERS	DATE:
	ENGINEER: LAST_MODIFIED=Mon Nov 18 15:02:39 1996	PAGE: 4

GENERATES PULSES FOR TRIGGER TIMING AND PEDESTALS

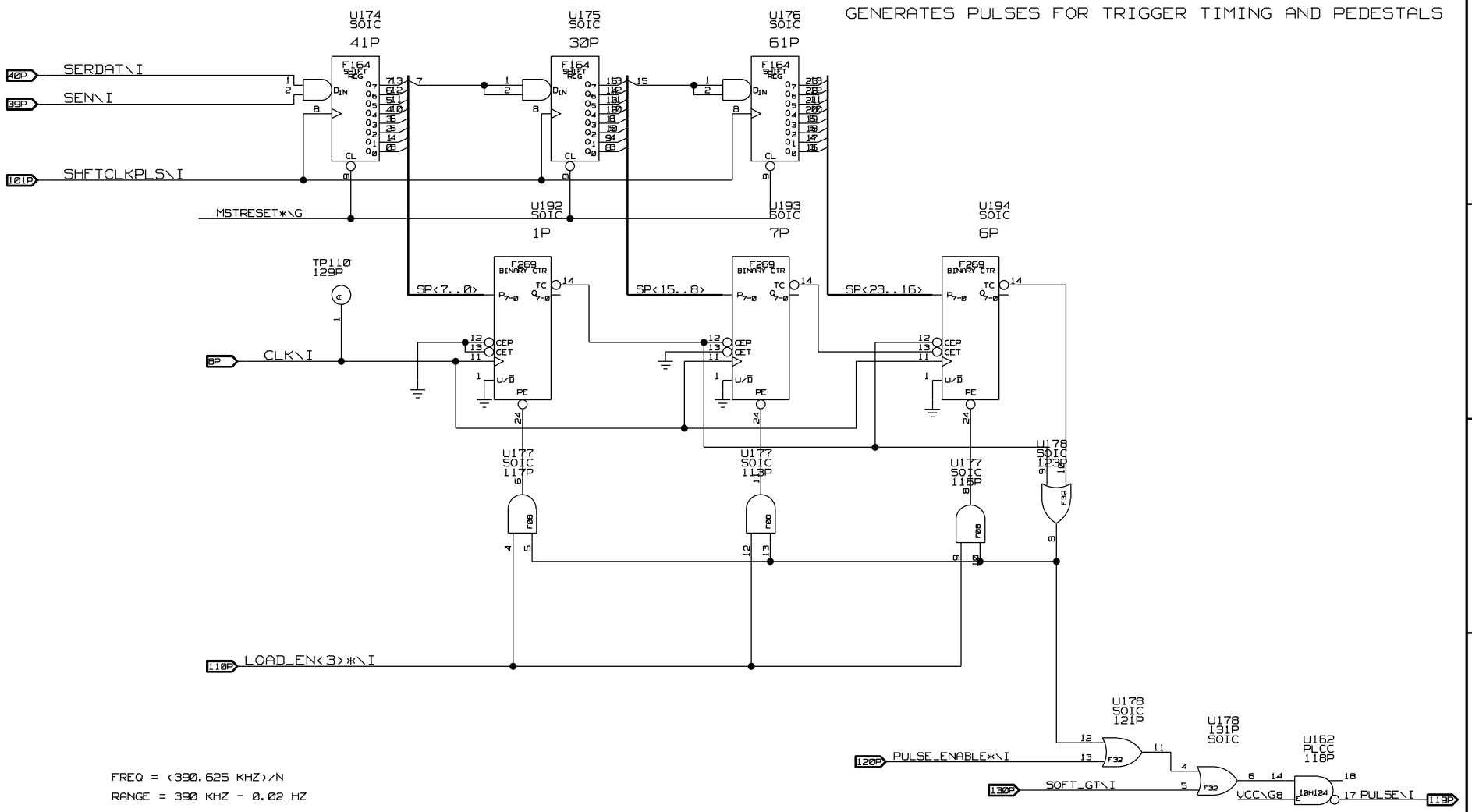

DRAWING

PLSR UNIVERSITY OF PENNSYLVANIA
HIGH ENERGY PHYSICS

TITLE: PULSER3
PULSER

DATE:

ENGINEER:
LAST_MODIFIED=Mon Nov 18 15:02:40 1996

PAGE: 4.A

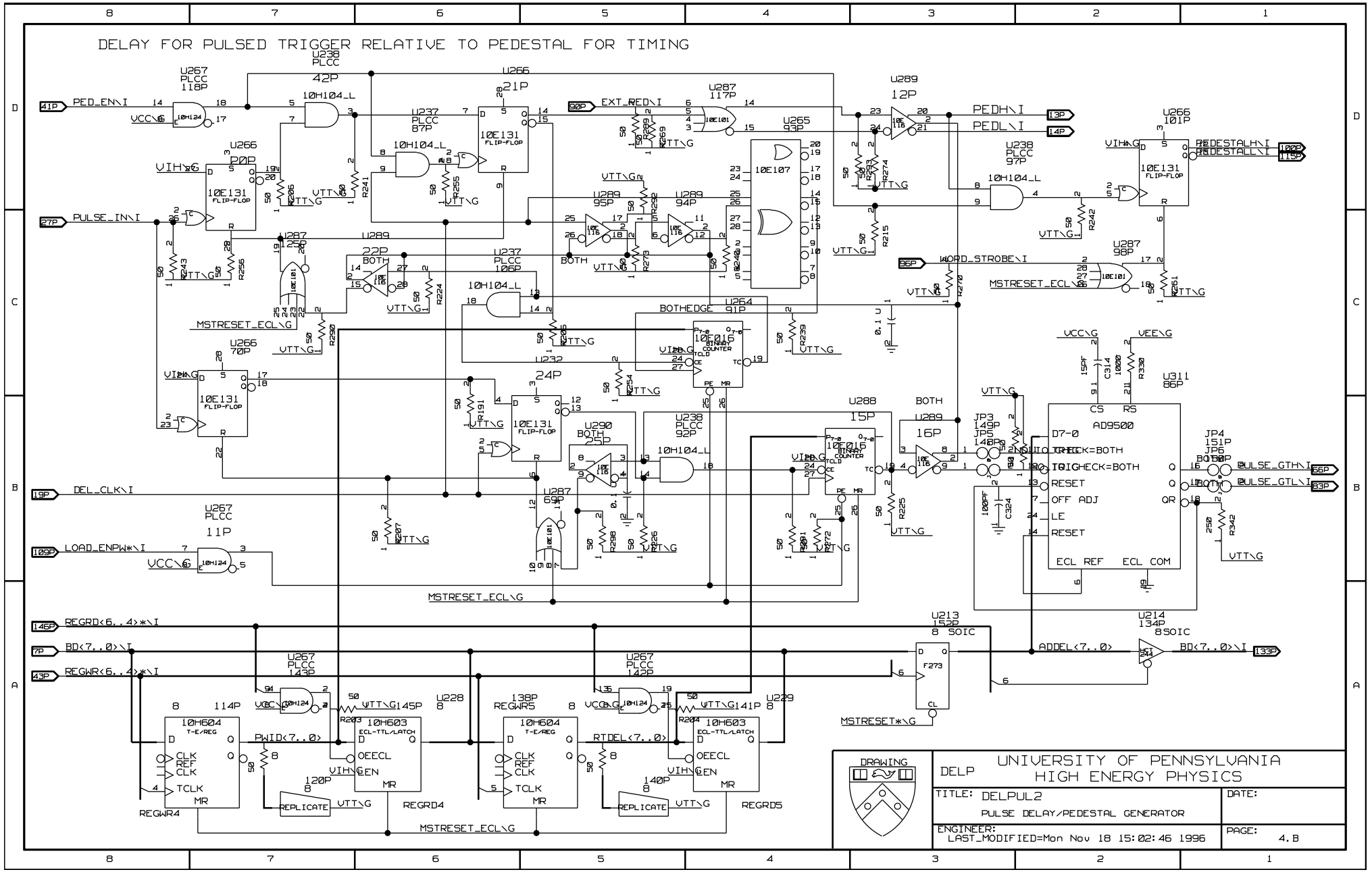
DELAY FOR PULSED TRIGGER RELATIVE TO PEDESTAL FOR TIMING
PED_EN\I
PULSE_IN\I
DEL_CLK\I
LOAD_ENPW*\I
REGRD<6..4>*\I
BD<7..0>\I
REGWR<6..4>*\I
EXT_RED\I
WORD_STROBE\I
MSTRESET_ECL\G
BOTHEDGE
BOTH
PEDH\I
PEDL\I
PEDESTALH\I
PEDESTALL\I
PULSE_GTH\I
PULSE_GTL\I
ADDEL<7..0>
PWID<7..0>
RTDEL<7..0>
REGWR4
REGRD4
REGWR5
REGRD5
MSTRESET*\G
U267 PLCC 118P
U238 PLCC 42P
U266 21P
U237 PLCC 87P
U287 117P
U265 93P
U289 12P
U266 101P
U238 PLCC 97P
U266 P0P
U287 125P
U289 22P
U237 PLCC 106P
U289 95P
U289 94P
U287 98P
U266 70P
U264 91P
U232 24P
U288 15P
U289 16P
U238 PLCC 92P
U290 25P
U287 65P
U267 PLCC 11P
U311 86P
JP3 149P
JP5 148P
JP4 151P
JP6 150P
AD9500
U213 152P 8 SOIC
U214 134P 8SOIC
U267 PLCC 143P
U267 PLCC 142P
U228
U229
10H604 T-E/REG
10H603 ECL-TTL/LATCH
10E131 FLIP-FLOP
10E107
10E016 BINARY COUNTER
10H104_L
REPLICATE
DRAWING
DELP
UNIVERSITY OF PENNSYLVANIA
HIGH ENERGY PHYSICS
TITLE: DELPUL2
PULSE DELAY/PEDESTAL GENERATOR
DATE:
ENGINEER:
LAST_MODIFIED=Mon Nov 18 15:02:46 1996
PAGE: 4.B

PRESCALE OF LOW NHIT TRIGGERS

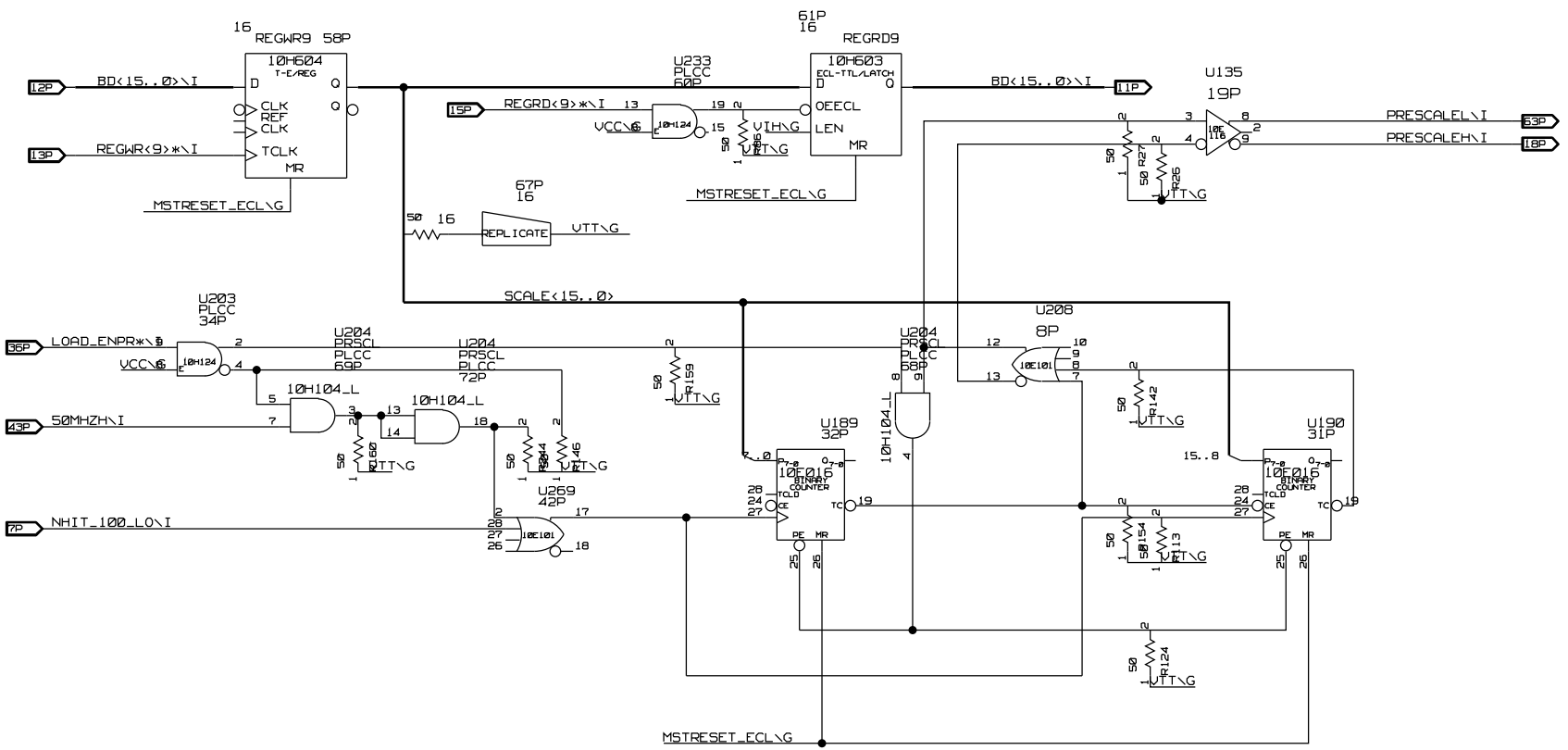

GET PRESCALE EVERY ~N+1 NHIT_100_LO

RANGE: 1/2 NHIT_100_LO - 1/65,536 NHIT_100_LO

DRAWING SRC: V=PRSC	UNIVERSITY OF PENNSYLVANIA HIGH ENERGY PHYSICS	
	TITLE: PRESCALE PRESCALE OF LOW NHIT TRIGGERS	DATE:
	ENGINEER: LAST_MODIFIED=Mon Nov 18 15:02:42 1996	PAGE: 4.C

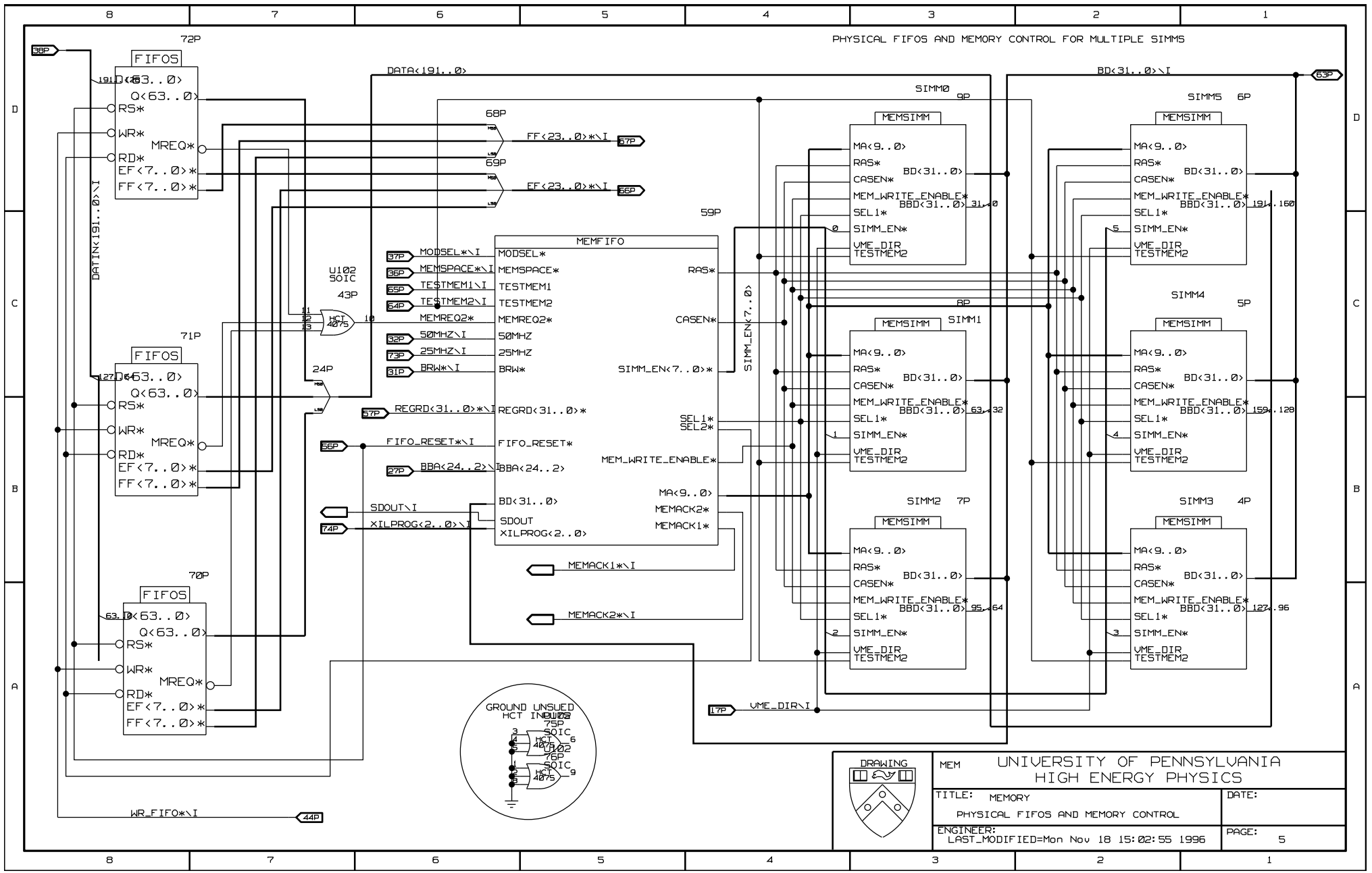
PHYSICAL FIFOS AND MEMORY CONTROL FOR MULTIPLE SIMMS
FIFOS
MEMFIFO
MEMSIMM
SIMM0
SIMM1
SIMM2
SIMM3
SIMM4
SIMM5
DATA<191..0>
BD<31..0>\I
DATIN<191..0>\I
MODSEL*\I
MEMSPACE*\I
TESTMEM1\I
TESTMEM2\I
MEMREQ2*
50MHZ\I
25MHZ\I
BRW*\I
REGRD<31..0>*\I
FIFO_RESET*\I
BBA<24..2>\I
SDOUT\I
XILPROG<2..0>\I
FF<23..0>*\I
EF<23..0>*\I
MEMACK1*\I
MEMACK2*\I
VME_DIR\I
WR_FIFO*\I
GROUND UNSUED HCT IN 74HCT4075
UNIVERSITY OF PENNSYLVANIA
HIGH ENERGY PHYSICS
DRAWING
MEM
TITLE: MEMORY
PHYSICAL FIFOS AND MEMORY CONTROL
DATE:
ENGINEER:
LAST_MODIFIED=Mon Nov 18 15:02:55 1996
PAGE: 5

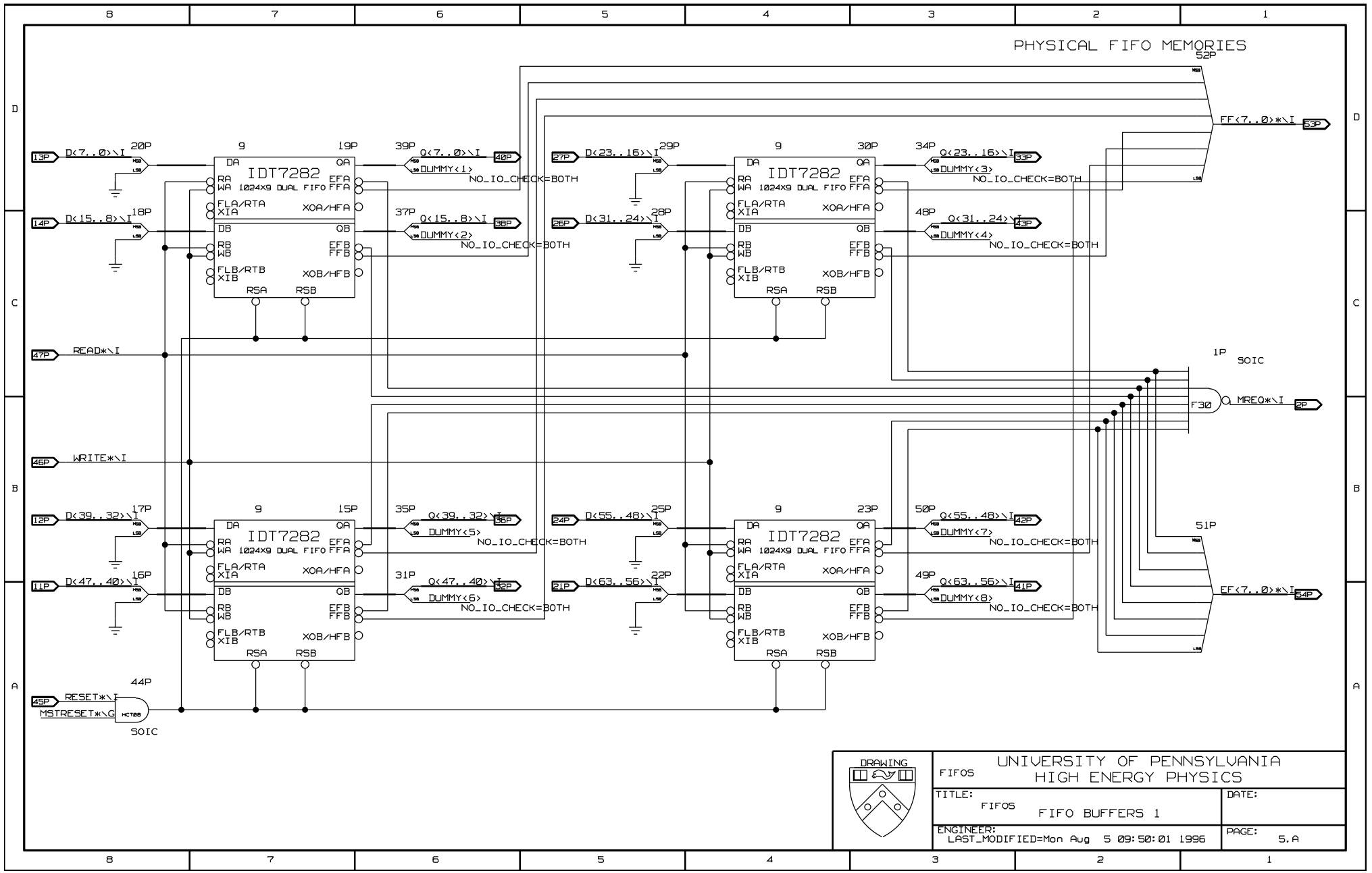
PHYSICAL FIFO MEMORIES
IDT7282
1024X9 DUAL FIFO
D<7..0>\I
D<15..8>\I
D<23..16>\I
D<31..24>\I
D<39..32>\I
D<47..40>\I
D<55..48>\I
D<63..56>\I
Q<7..0>\I
Q<15..8>\I
Q<23..16>\I
Q<31..24>\I
Q<39..32>\I
Q<47..40>\I
Q<55..48>\I
Q<63..56>\I
DUMMY<1>
DUMMY<2>
DUMMY<3>
DUMMY<4>
DUMMY<5>
DUMMY<6>
DUMMY<7>
DUMMY<8>
NO_IO_CHECK=BOTH
FF<7..0>*\I
EF<7..0>*\I
READ*\I
WRITE*\I
RESET*\I
MSTRESET*\G
MREQ*\I
F30
HCT08
SOIC
UNIVERSITY OF PENNSYLVANIA
HIGH ENERGY PHYSICS
DRAWING
FIFOS
TITLE:
FIFOS
FIFO BUFFERS 1
DATE:
ENGINEER:
LAST_MODIFIED=Mon Aug 5 09:50:01 1996
PAGE:
5.A

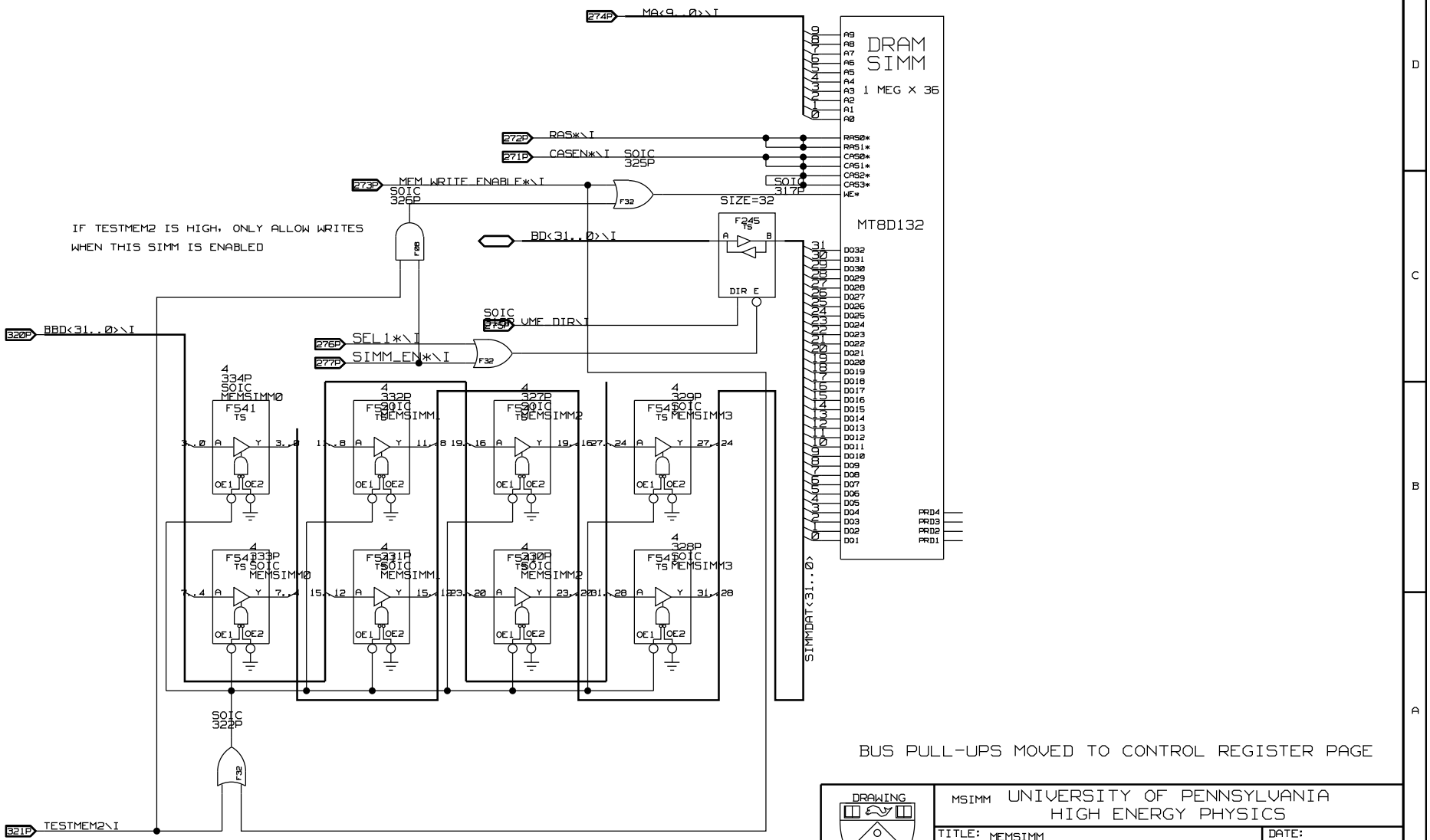
ONE OF SIX SIMMS
DRAM SIMM
1 MEG X 36
MT8D132
274P MA<9..0>\I
272P RAS*\I
271P CASEN*\I SOIC 325P
273P MEM WRITE ENABLE*\I SOIC 326P
SOIC 317P
SIZE=32
IF TESTMEM2 IS HIGH, ONLY ALLOW WRITES
WHEN THIS SIMM IS ENABLED
BD<31..0>\I
F245 TS
DIR E
SOIC 315P VME DIR\I
320P BBD<31..0>\I
276P SEL1*\I
277P SIMM_EN*\I
4 334P SOIC MEMSIMM0
4 332P SOIC MEMSIMM1
4 327P SOIC MEMSIMM2
4 329P SOIC MEMSIMM3
F541 TS
F540 TS
F545 TS
4 333P SOIC MEMSIMM0
4 331P SOIC MEMSIMM1
4 330P SOIC MEMSIMM2
4 328P SOIC MEMSIMM3
SOIC 322P
321P TESTMEM2\I
SIMMDAT<31..0>
BUS PULL-UPS MOVED TO CONTROL REGISTER PAGE
DRAWING
MSIMM UNIVERSITY OF PENNSYLVANIA
HIGH ENERGY PHYSICS
TITLE: MEMSIMM
SIMM MODULES
DATE:
ENGINEER:
Fri Oct 11 15:13:01 1996
PAGE: 5.B

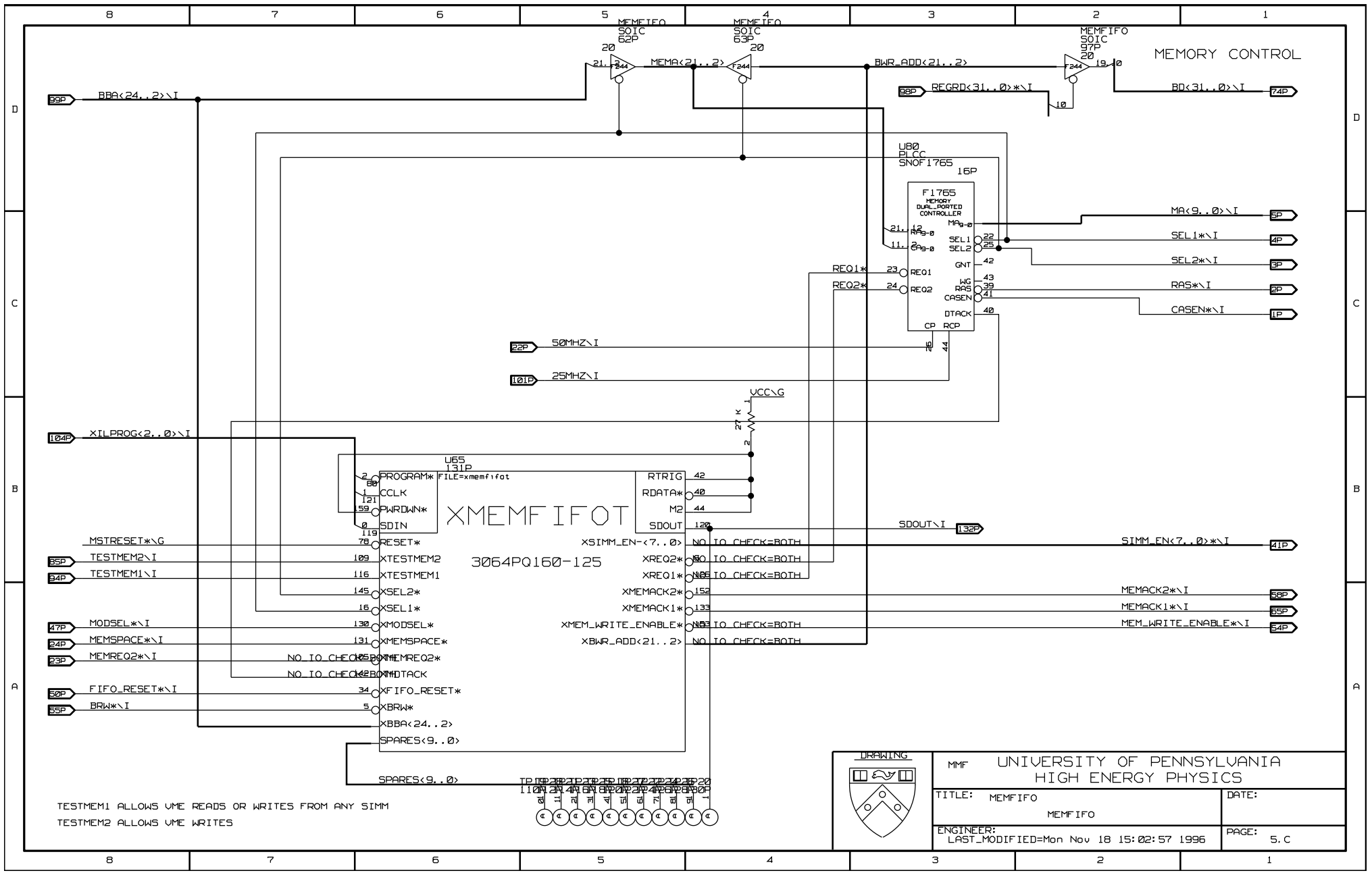
MEMORY CONTROL
MEMFIFO SOIC 62P
MEMFIFO SOIC 63P
MEMFIFO SOIC 97P
MEMA<21..2>
BWR_ADD<21..2>
BBA<24..2>\I
REGRD<31..0>*\I
BD<31..0>\I
U80 PLCC SNOF1765 16P
F1765 MEMORY DUAL_PORTED CONTROLLER
MA<9..0>\I
SEL1*\I
SEL2*\I
RAS*\I
CASEN*\I
REQ1*
REQ2*
50MHZ\I
25MHZ\I
VCC\G
XILPROG<2..0>\I
U65 131P FILE=xmemfifot
XMEMFIFOT
3064PQ160-125
PROGRAM*
CCLK
PWRDWN*
SDIN
RESET*
XTESTMEM2
XTESTMEM1
XSEL2*
XSEL1*
XMODSEL*
XMEMSPACE*
XMEMREQ2*
XDTACK
XFIFO_RESET*
XBRW*
XBBA<24..2>
SPARES<9..0>
RTRIG
RDATA*
M2
SDOUT
SDOUT\I
XSIMM_EN-<7..0>
XREQ2*
XREQ1*
XMEMACK2*
XMEMACK1*
XMEM_WRITE_ENABLE*
XBWR_ADD<21..2>
SIMM_EN<7..0>*\I
MEMACK2*\I
MEMACK1*\I
MEM_WRITE_ENABLE*\I
MSTRESET*\G
TESTMEM2\I
TESTMEM1\I
MODSEL*\I
MEMSPACE*\I
MEMREQ2*\I
FIFO_RESET*\I
BRW*\I
TESTMEM1 ALLOWS VME READS OR WRITES FROM ANY SIMM
TESTMEM2 ALLOWS VME WRITES
DRAWING
MMF
UNIVERSITY OF PENNSYLVANIA
HIGH ENERGY PHYSICS
TITLE: MEMFIFO
MEMFIFO
DATE:
ENGINEER:
LAST_MODIFIED=Mon Nov 18 15:02:57 1996
PAGE: 5.C

MULTIPLEXED THRESHOLD MONITOR

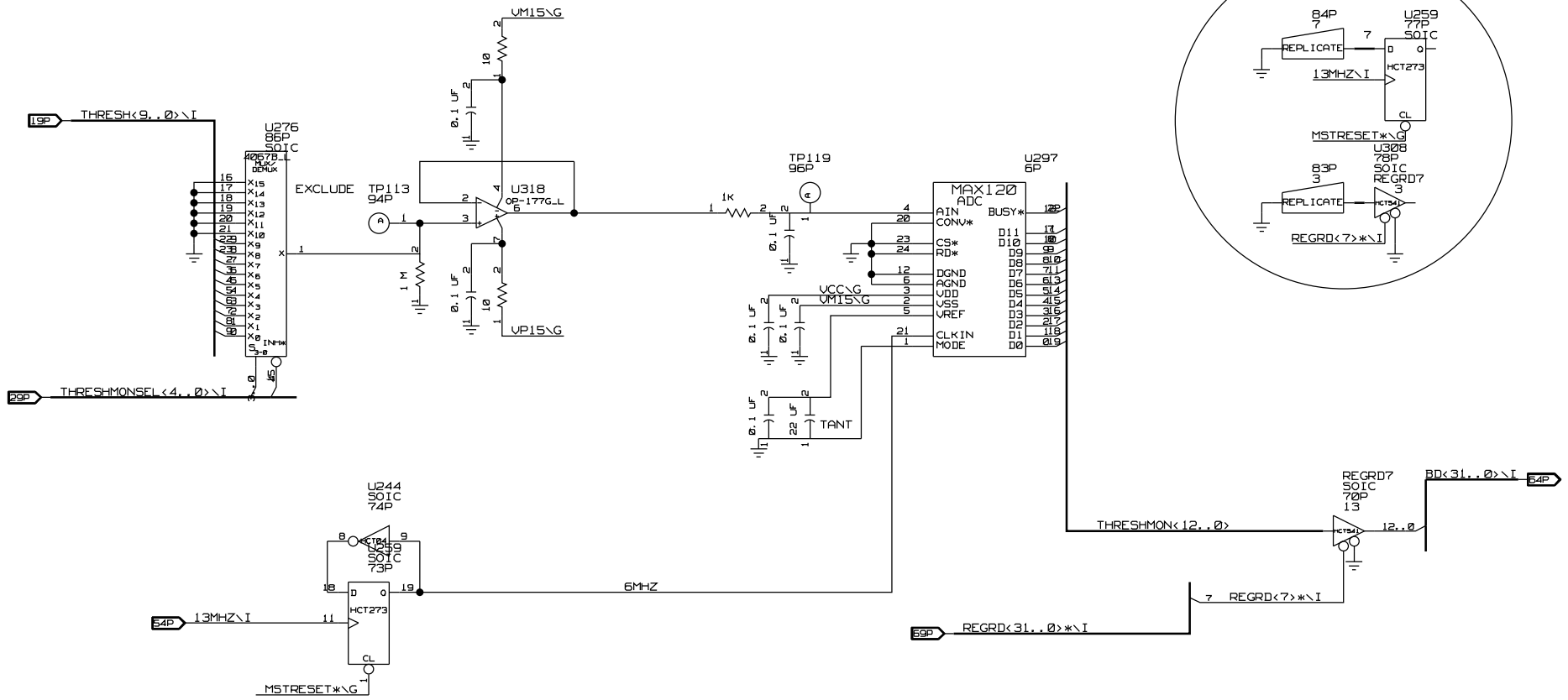

DRAWING	THMON	UNIVERSITY OF PENNSYLVANIA HIGH ENERGY PHYSICS
	TITLE: THRESHMON MULTIPLEXED MONITOR OF TRIGGER TRESHOLDS	DATE:
	ENGINEER: LAST_MODIFIED=Mon Nov 18 15:03:13 1996	PAGE: 6

VME INTERFACE CONNECTORS

J1 - TOP CONNECTOR

EUROCONN J1 2P

	A	B	C	
VD<00>\I	A1	B1	C1	65 VD<08>\I
VD<01>\I	A2	B2	C2	66 VD<09>\I
VD<02>\I	A3	B3	C3	67 VD<10>\I
VD<03>\I	A4	B4	C4	68 VD<11>\I
VD<04>\I	A5	B5	C5	69 VD<12>\I
VD<05>\I	A6	B6	C6	70 VD<13>\I
VD<06>\I	A7	B7	C7	71 VD<14>\I
VD<07>\I	A8	B8	C8	72 VD<15>\I
GND \G 9	A9	B9	C9	73 GND \G
VSYSCLK\I 10	A10	B10	C10	74
GND \G 11	A11	B11	C11	75
VDS1*\I 12	A12	B12	C12	76 VSYSRESET* \I
VDS0*\I 13	A13	B13	C13	77 VLWORD*\I
VWRITE* \I 14	A14	B14	C14	78 VAM<5>\I
GND \G 15	A15	B15	C15	79 VA<23>\I
VDTACK* \I 16	A16	B16	C16	80 VA<22>\I
GND \G 17	A17	B17	C17	81 VA<21>\I
VAS*\I 18	A18	B18	C18	82 VA<20>\I
GND \G 19	A19	B19	C19	83 VA<19>\I
20	A20	B20	C20	84 VA<18>\I
21	A21	B21	C21	85 VA<17>\I
22	A22	B22	C22	86 VA<16>\I
VAM<4>\I 23	A23	B23	C23	87 VA<15>\I
VA<07>\I 24	A24	B24	C24	88 VA<14>\I
VA<06>\I 25	A25	B25	C25	89 VA<13>\I
VA<05>\I 26	A26	B26	C26	90 VA<12>\I
VA<04>\I 27	A27	B27	C27	91 VA<11>\I
VA<03>\I 28	A28	B28	C28	92 VA<10>\I
VA<02>\I 29	A29	B29	C29	93 VA<09>\I
VA<01>\I 30	A30	B30	C30	94 VA<08>\I
31	A31	B31	C31	95
VMEP5V\G 32	A32	B32	C32	96 VMEP5V\G

33 VBBSY, 34 VBCLR, 35 VACFAIL, 36, 37, 38, 39, 40, 41, 42, 43, 44, 45, 46, 47, 48 VAM<0>\I, 49 VAM<1>\I, 50 VAM<2>\I, 51 VAM<3>\I, 52 GND \G, 53, 54, 55 GND \G, 56, 57, 58, 59, 60, 61, 62, 63, 64 VMEP5V\G

J2 BOTTOM CONNECTOR

EUROCONN J2 1P

	A	B	C	
1	A1	B1	C1	65
2	A2	B2	C2	66 M5V
3	A3	B3	C3	67 M5V
4	A4	B4	C4	68 M5V
5	A5	B5	C5	69 M5V
6	A6	B6	C6	70
7	A7	B7	C7	71
8	A8	B8	C8	72
9	A9	B9	C9	73
10	A10	B10	C10	74 GND \G
11	A11	B11	C11	75
12	A12	B12	C12	76
13	A13	B13	C13	77
14	A14	B14	C14	78
15	A15	B15	C15	79
16	A16	B16	C16	80 M15V
17	A17	B17	C17	81
18	A18	B18	C18	82
19	A19	B19	C19	83
20	A20	B20	C20	84
21	A21	B21	C21	85
22	A22	B22	C22	86 GND \G
23	A23	B23	C23	87
24	A24	B24	C24	88
25	A25	B25	C25	89
26	A26	B26	C26	90
27	A27	B27	C27	91 P15V
28	A28	B28	C28	92
29	A29	B29	C29	93
30	A30	B30	C30	94
31	A31	B31	C31	95
32	A32	B32	C32	96

1 VMEP5V\G, 2 GND \G, 3, 4, 5, 6, 7, 8, 9, 10 GND \G, 11, 12 GND \G, 13 VMEP5V\G, 14, 15, 16, 17, 18, 19, 20, 21, 22 GND \G, 23, 24, 25, 26, 27, 28, 29, 30, 31 GND \G, 32

4P

3P VME_JACK<75..0>\I

VLWORD*\I → 14P
VDS0*\I → 13P
VDS1*\I → 12P
VSYSRESET*\I → 11P
VWRITE*\I → 10P
VSYSCLK\I → 9P
VAS*\I → 8P
VAM<5..0>\I → 7P
VA<31..1>\I → 6P
VD<31..0>\I → 5P

18P / 17P

GND\G
VMEP5V\G
M5V
M15V
P15V

POWER<5..1> → POWER_IN: POWER<5..1>

DRAWING

VMECONN UNIVERSITY OF PENNSYLVANIA
HIGH ENERGY PHYSICS

TITLE: VME_CONNECT
VME INTERFACE CONNECTORS

DATE:

ENGINEER:
LAST_MODIFIED=Mon Nov 18 15:03:15 1996

PAGE: 7

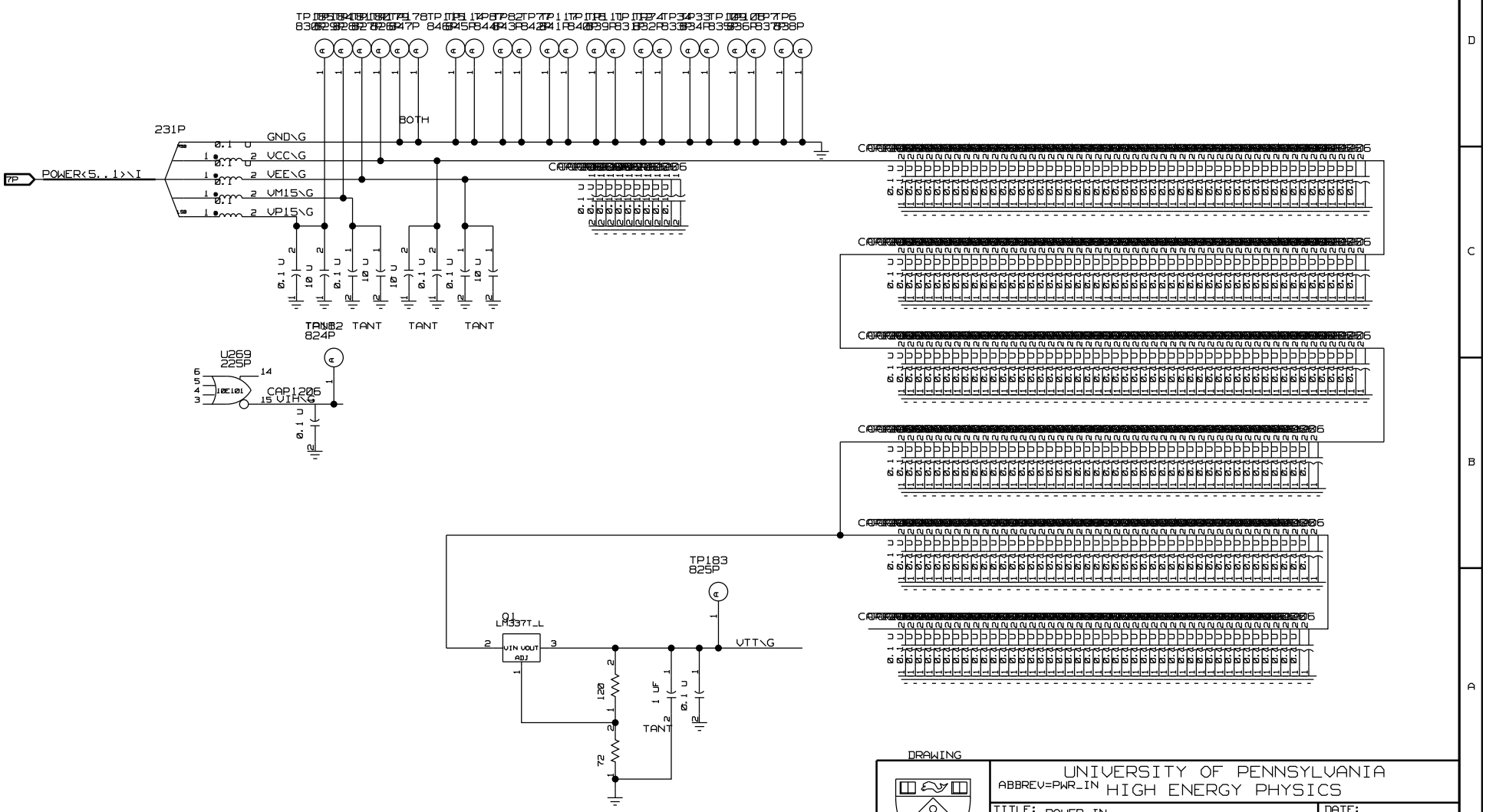
231P
GND\G
VCC\G
VEE\G
VM15\G
VP15\G
7P
POWER<5..1>\I
BOTH
TANT
TANT
TANT
TANT
824P
U269
225P
CAP1206
VIN\G
TP183
825P
VTT\G
U1
LM337T_L
VIN VOUT
ADJ
120
1 UF
0.1 U
TANT
72
DRAWING
UNIVERSITY OF PENNSYLVANIA
ABBREV=PWR_IN
HIGH ENERGY PHYSICS
TITLE: POWER_IN
POWER SUPPLIES
DATE:
ENGINEER:
LAST_MODIFIED=Mon Nov 18 15:03:36 1996
PAGE: 7.B.I

CONNECTORS AND LEDS

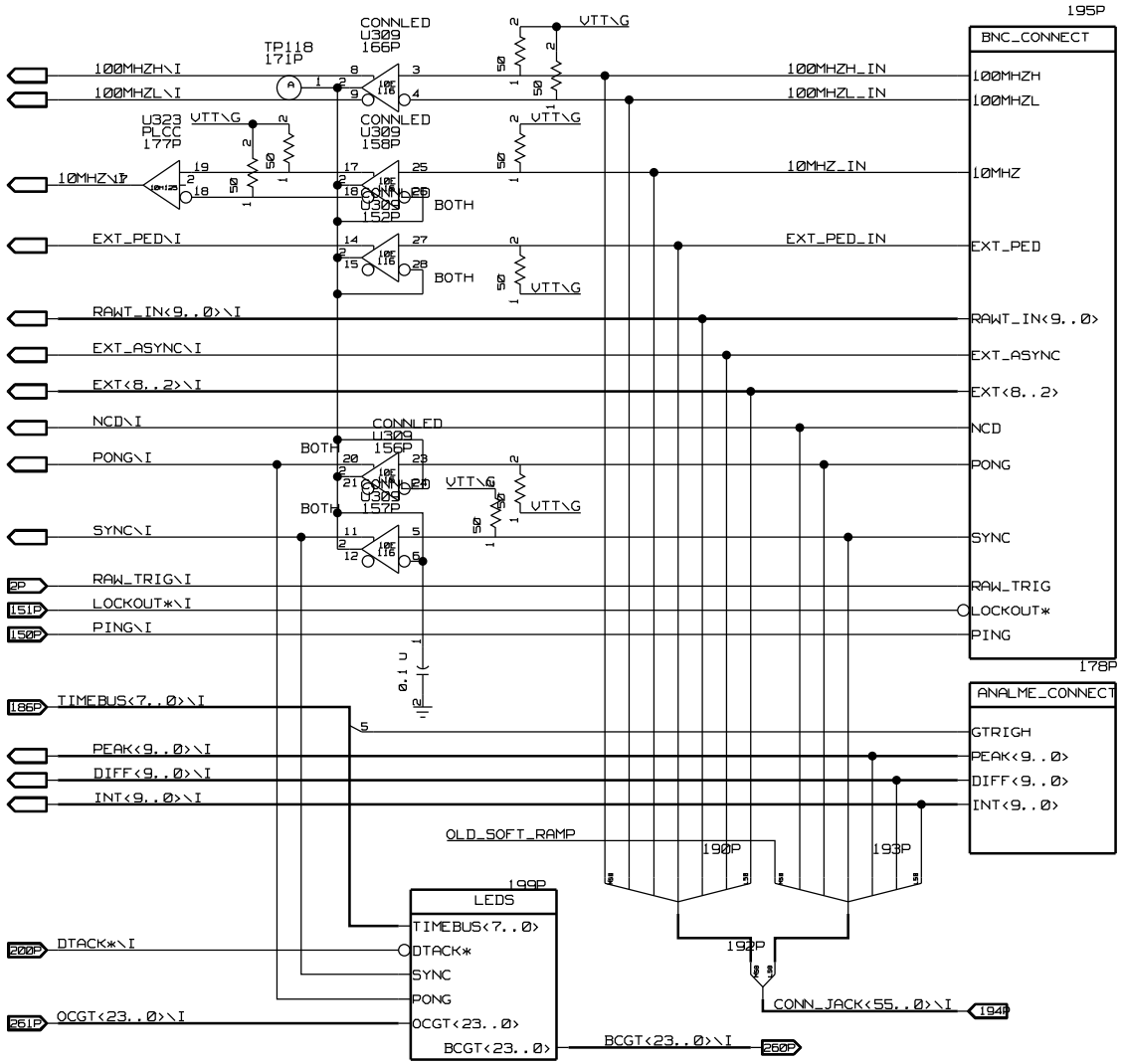

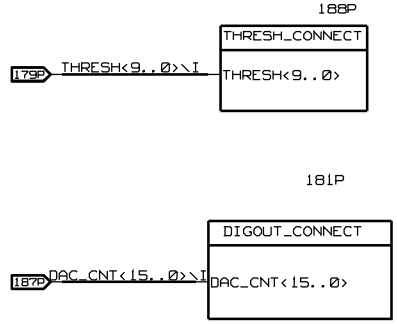

PLAY CONNECTORS

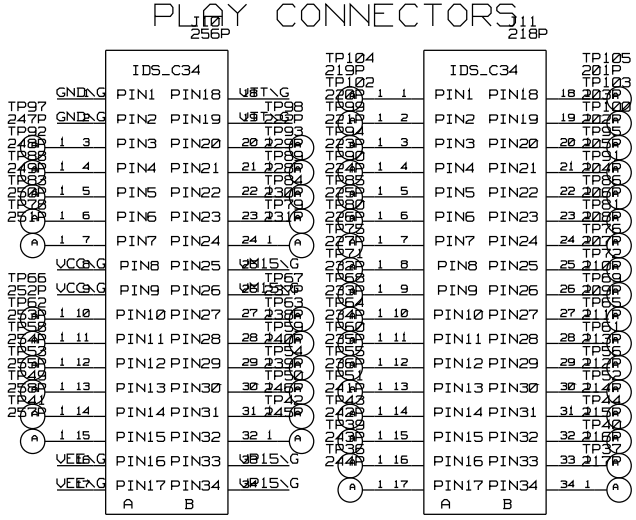

DRAWING
CONNLED UNIVERSITY OF PENNSYLVANIA
HIGH ENERGY PHYSICS

TITLE: CONNS_LEDS CONNECTORS AND LEDS	DATE:
ENGINEER: LAST_MODIFIED=Mon Nov 18 15:03:42 1996	PAGE: 8

TESTPOINTS FOR BNC CONNECTORS

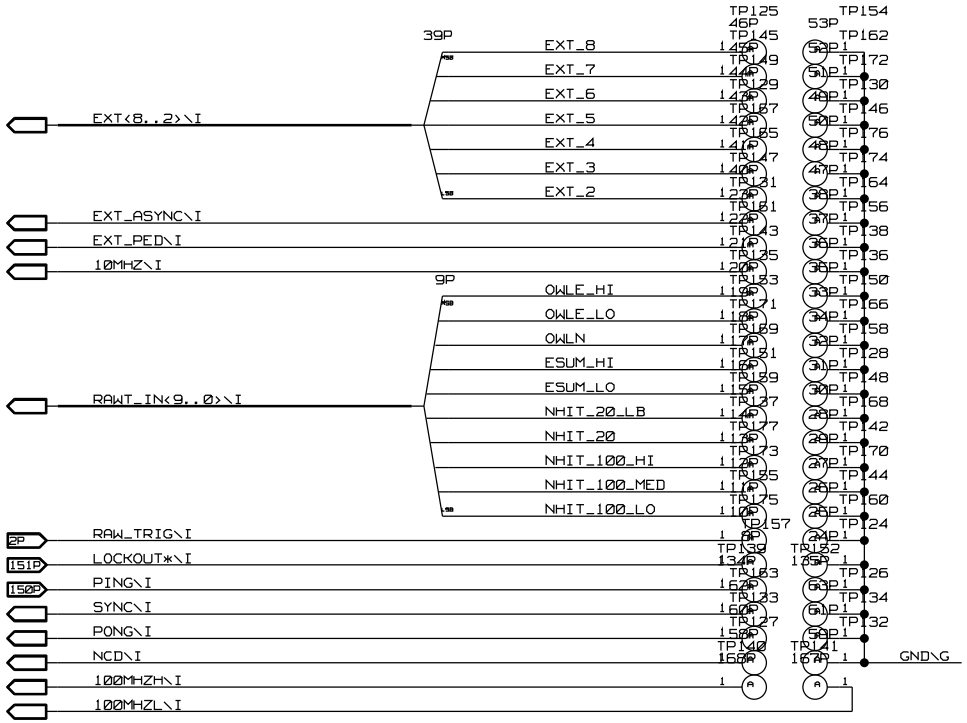

DRAWING	DOCONN UNIVERSITY OF PENNSYLVANIA HIGH ENERGY PHYSICS	
	TITLE: BNC_CONNECT TESTPOINTS FOR BNC CONNECTORS	DATE:
	ENGINEER: LAST_MODIFIED=Mon Nov 18 15:03:47 1996	PAGE: 8.A

DAC CONTROL CONNECTOR

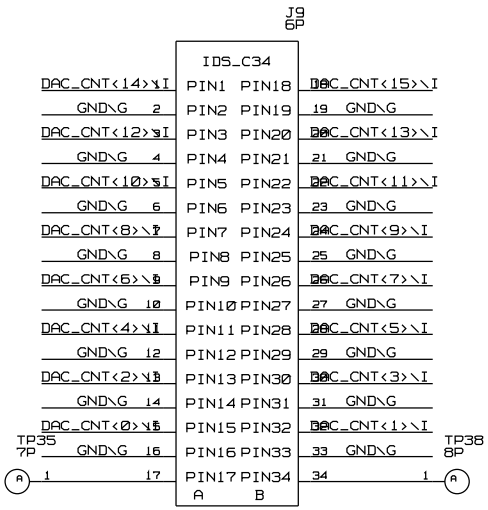

DRAWING

DOCONN UNIVERSITY OF PENNSYLVANIA
HIGH ENERGY PHYSICS

TITLE: DIGOUT_CONNECT
DIGITAL OUTPUT CONNECTOR

DATE:

ENGINEER:
LAST_MODIFIED=Mon Nov 18 15:03:44 1996

PAGE: 8.B

DC THRESHOLD CONNECTOR

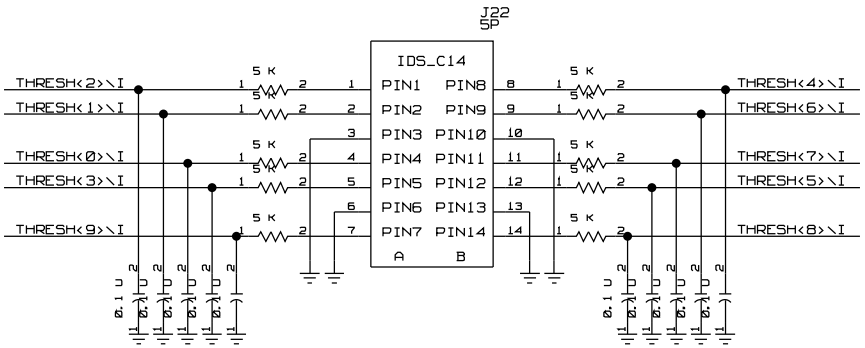

DRAWING

THRCONN UNIVERSITY OF PENNSYLVANIA
HIGH ENERGY PHYSICS

TITLE: THRESH_CONNECT
DC THRESHOLD CONNECTOR

DATE:

ENGINEER:
LAST_MODIFIED=Mon Nov 18 15:03:45 1996

PAGE: 8.C

ANALOG MEASUREMENT CONNECTORS

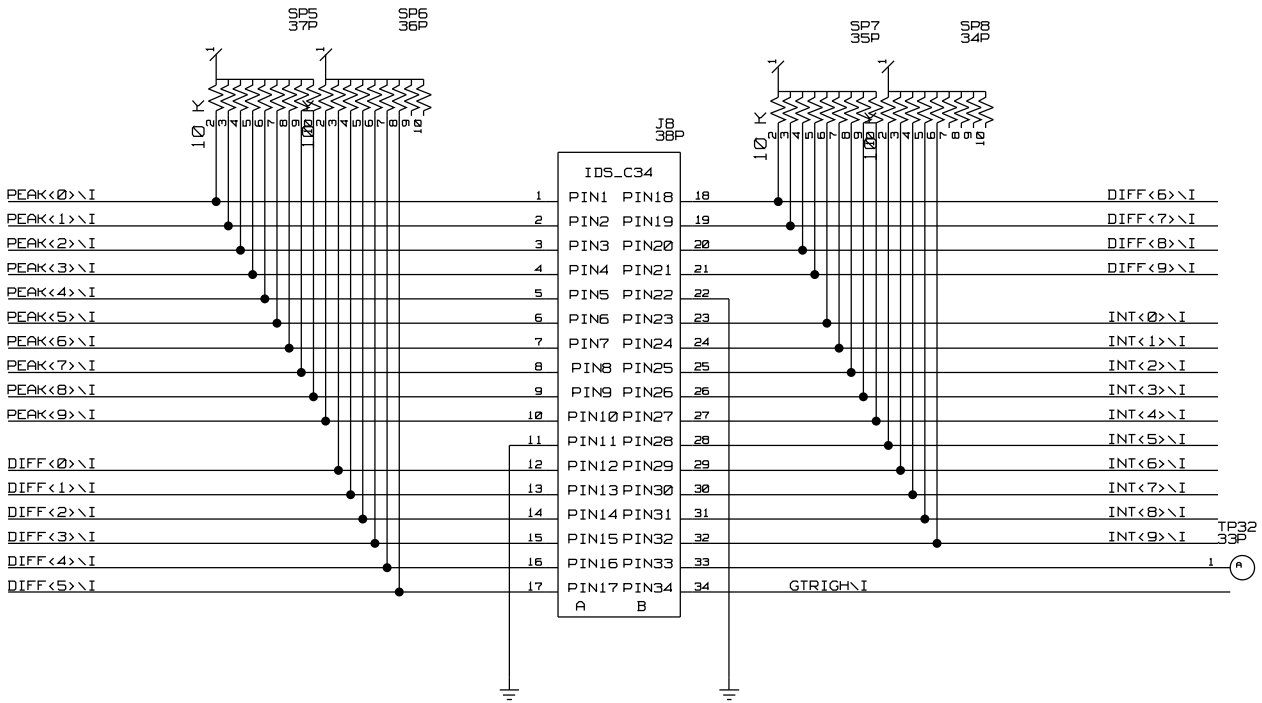

DRAWING

ANMECONN UNIVERSITY OF PENNSYLVANIA
HIGH ENERGY PHYSICS

TITLE: ANALME_CONNECT
ANALOG MEASUREMENT CONNECTORS

DATE:

ENGINEER:
LAST_MODIFIED=Mon Nov 18 15:03:43 1996

PAGE: 8.D

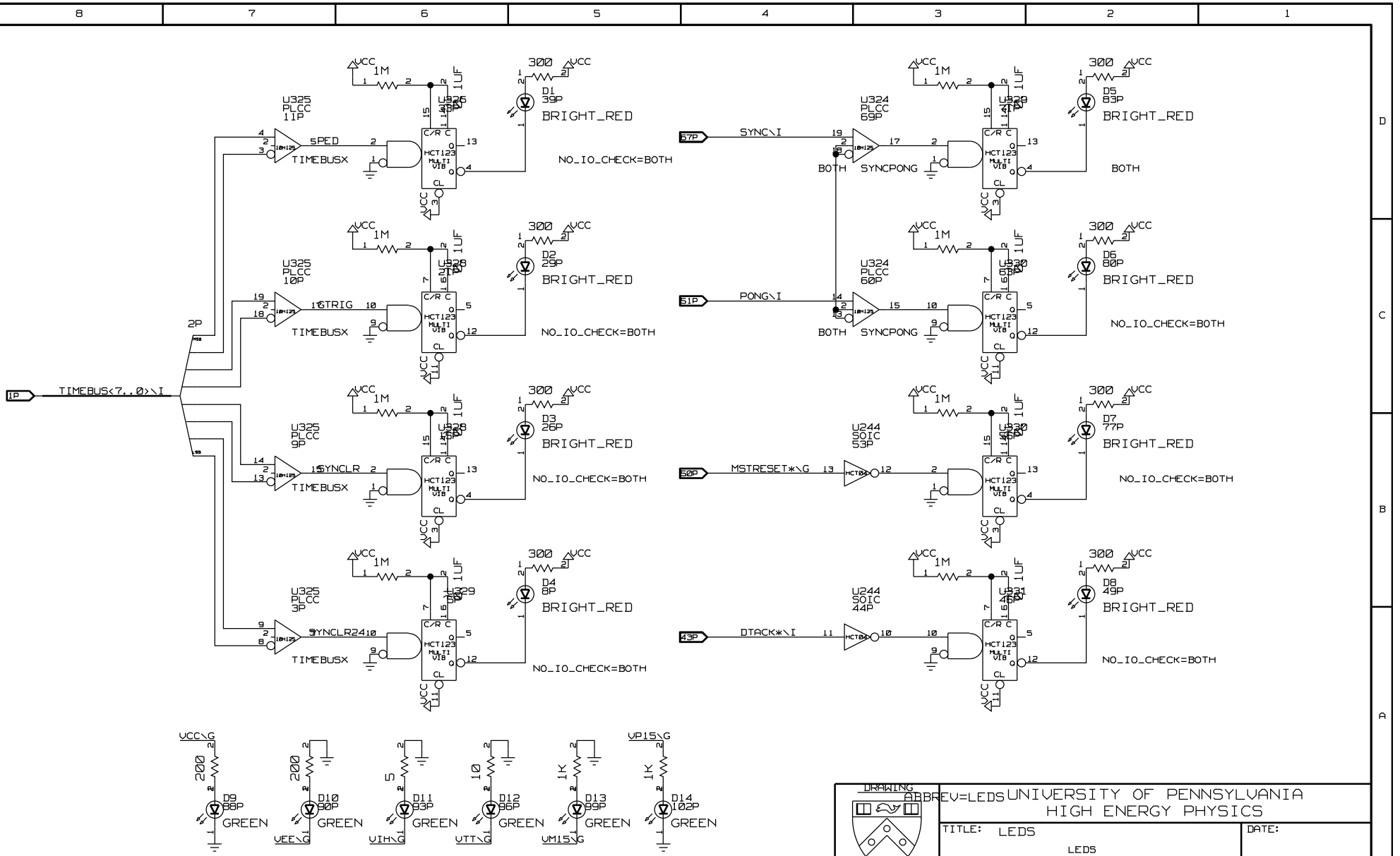
TIMEBUS<7..0>\I
1P
2P
U325 PLCC 11P
U325 PLCC 10P
U325 PLCC 9P
U325 PLCC 3P
TIMEBUSX
5PED
6TRIG
5SYNCLR
5SYNCLR24
U326 3P
U328 2P
U328 1P
U329 5P
U324 PLCC 69P
U324 PLCC 60P
U244 SOIC 53P
U244 SOIC 44P
SYNC\I
PONG\I
MSTRESET*\G
DTACK*\I
57P
51P
50P
43P
BOTH
SYNCPONG
HCT123
HCT04
VCC
1M
1UF
300
D1 39P
D2 29P
D3 26P
D4 8P
D5 83P
D6 80P
D7 77P
D8 49P
BRIGHT_RED
NO_IO_CHECK=BOTH
VCC\G
VEE\G
VIH\G
VTT\G
VM15\G
VP15\G
200
5
10
1K
D9 88P
D10 90P
D11 93P
D12 96P
D13 99P
D14 102P
GREEN
DRAWING
ABBREV=LEDS
UNIVERSITY OF PENNSYLVANIA
HIGH ENERGY PHYSICS
TITLE: LEDS
LEDS
DATE:
ENGINEER: Mon Nov 18 15:03:50 1996
PAGE: 8.E

DRAWING ABBREV=LEDS

UNIVERSITY OF PENNSYLVANIA
HIGH ENERGY PHYSICS

TITLE: LEDS
LEDS

DATE:

ENGINEER:

Mon Nov 18 15:03:53 1996

PAGE: 8.E

DIVISION OF 100MHZ CLOCK

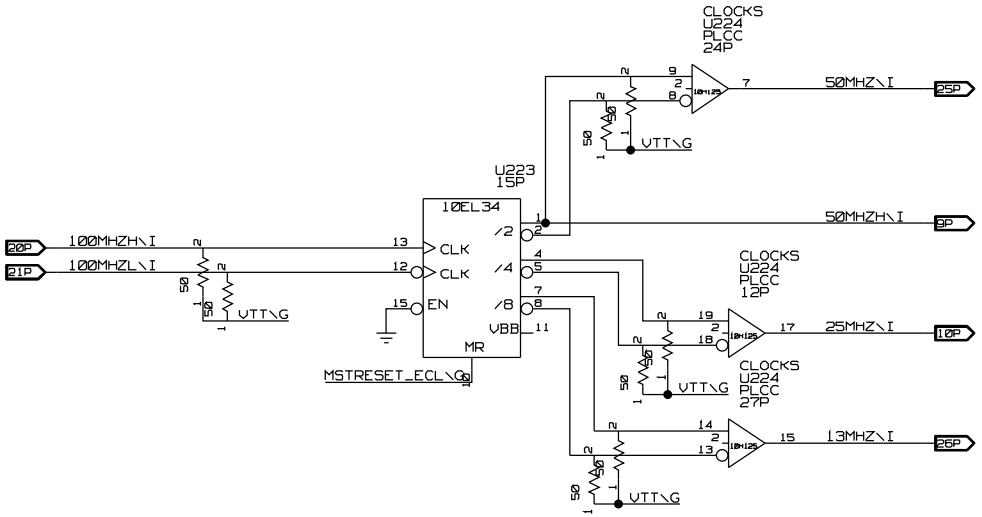

DRAWING

CLK

UNIVERSITY OF PENNSYLVANIA
HIGH ENERGY PHYSICS

TITLE: CLOCK
50MHZ CLOCK

DATE:

ENGINEER:
LAST_MODIFIED=Mon Nov 18 15:03:39 1996

PAGE: 9

FANOUT FOR SYNCLRS, GLOBAL TRIGGER
AND TEST TIME PULSES
GLOBAL TRIGGER AND PEDESTALS
CAN BE MASKED ON A CRATE-BY-CRATE BASIS.

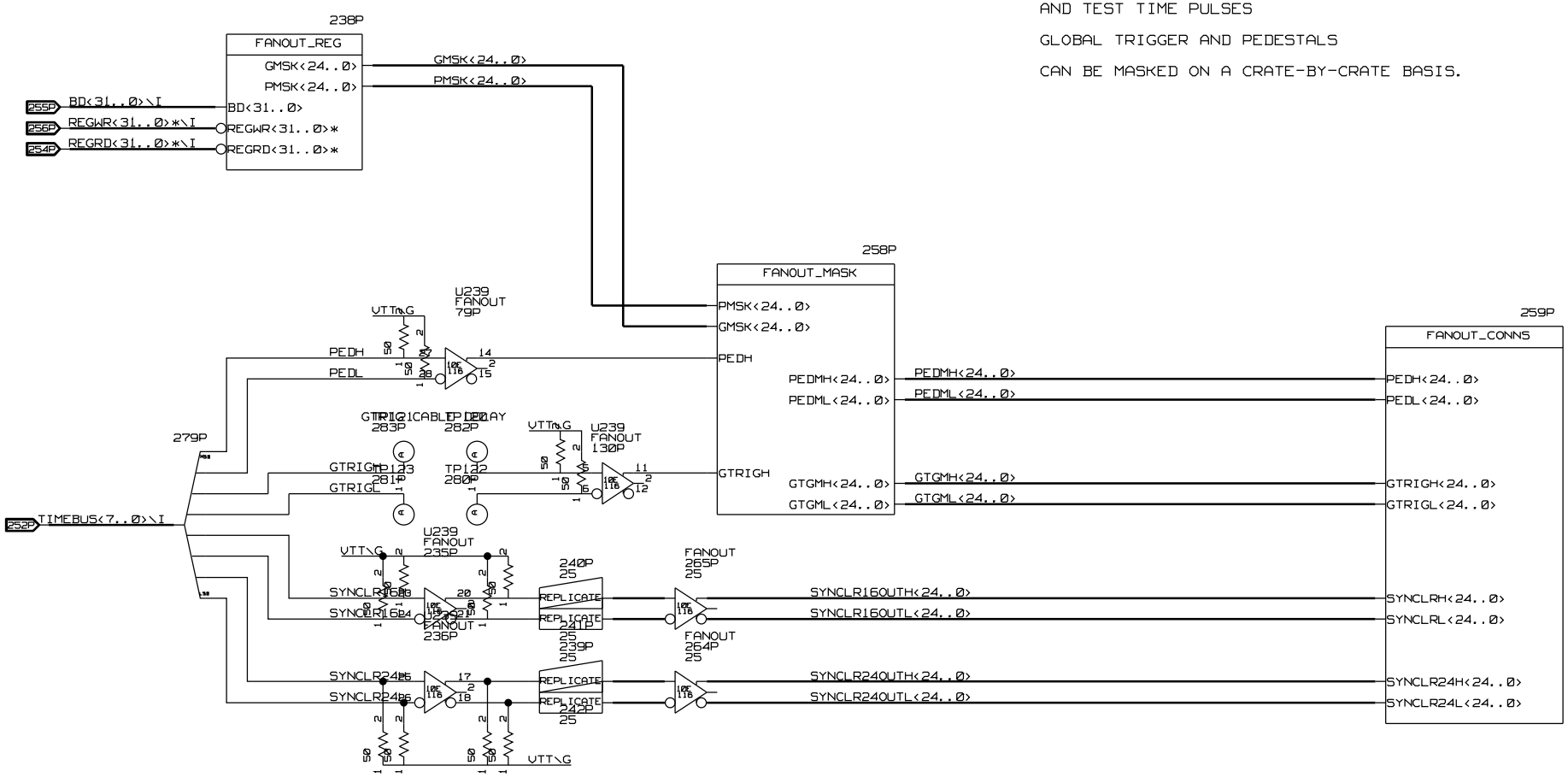

FANOUT REGISTERS FOR SYNCLRS, GLOBAL
TRIGGER AND TEST TIME PULSES

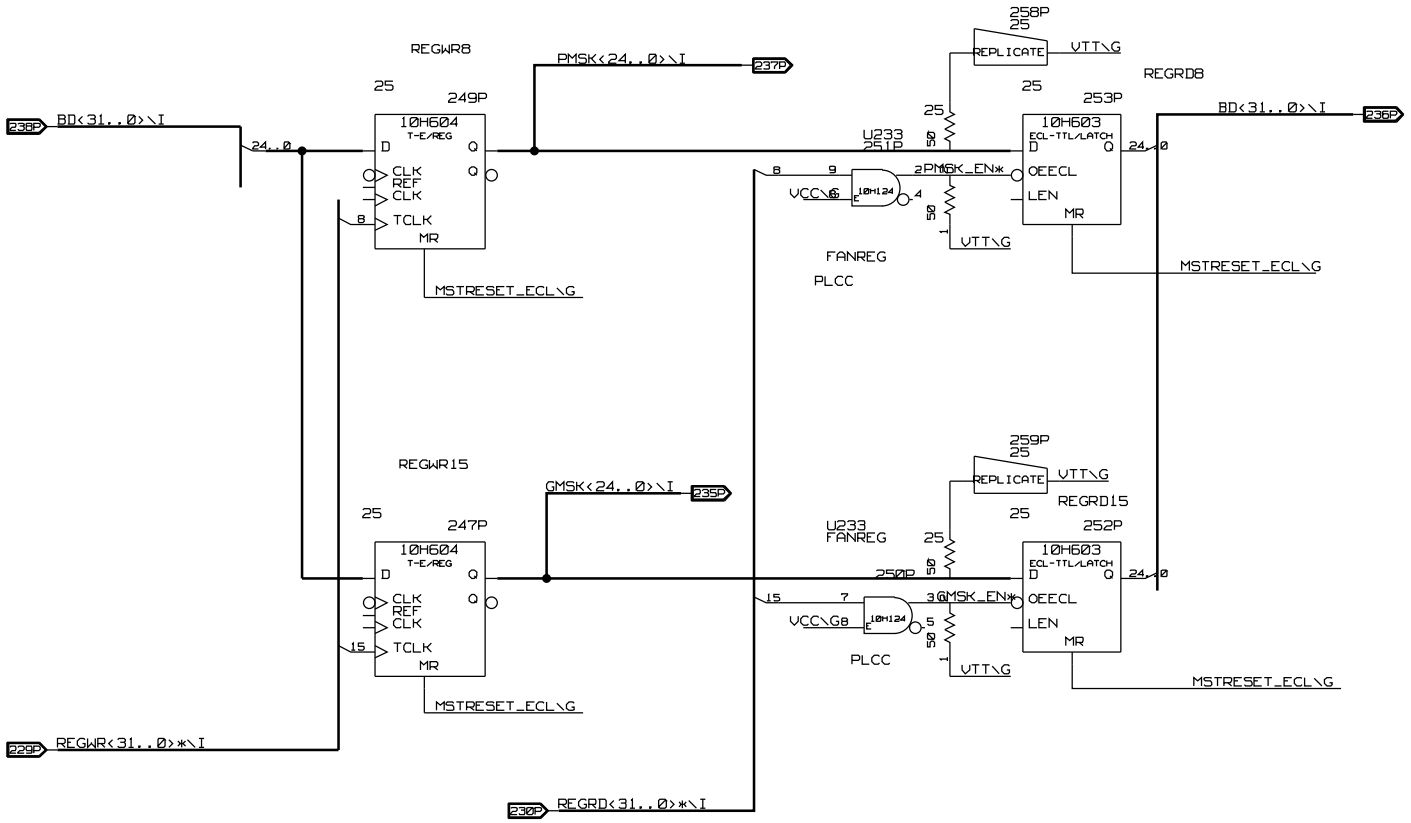

DRAWING	FOUTR	UNIVERSITY OF PENNSYLVANIA HIGH ENERGY PHYSICS
	TITLE: FANOUT_REG FANOUT REGISTERS	DATE:
	ENGINEER: LAST_MODIFIED=Mon Nov 18 15:03:55 1996	PAGE: 10.A

FANOUT_CONNS 10. B

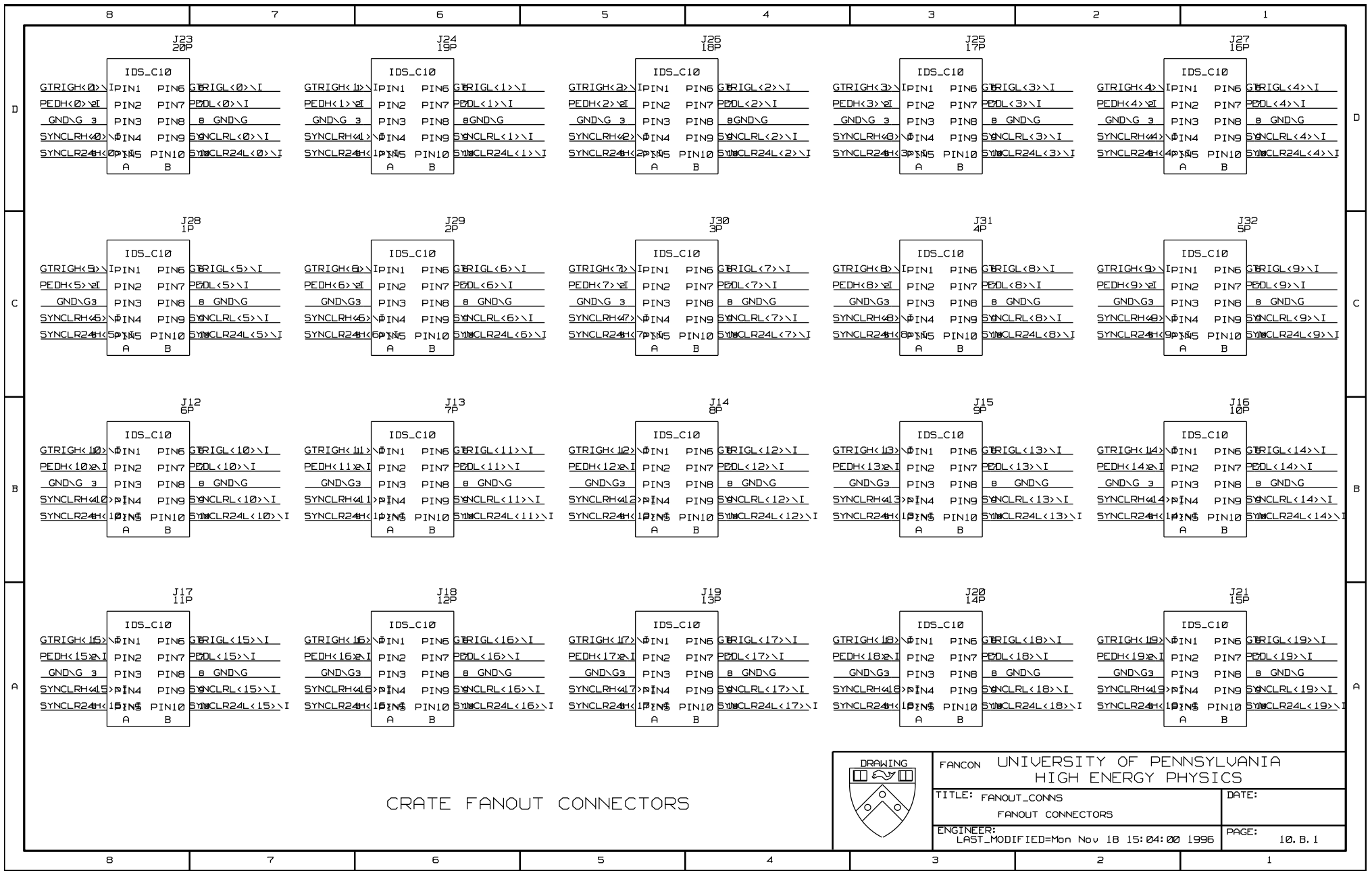

CRATE FANOUT CONNECTORS

DRAWING

FANCON UNIVERSITY OF PENNSYLVANIA
HIGH ENERGY PHYSICS

TITLE: FANOUT_CONNS
FANOUT CONNECTORS

DATE:

ENGINEER:
LAST_MODIFIED=Mon Nov 18 15:04:00 1996

PAGE: 10.B.1

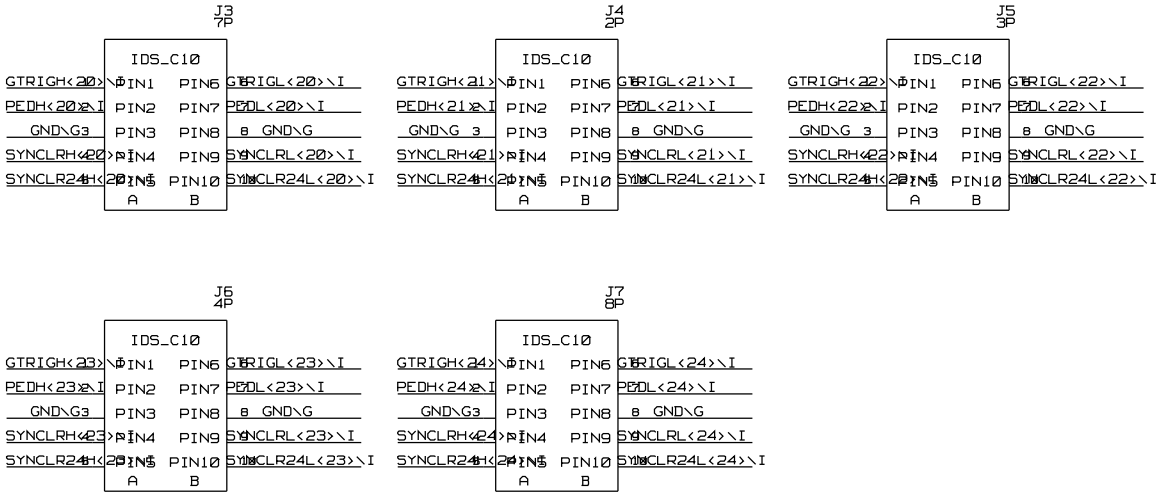

SPARE FANOUT CONNECTORS

DRAWING

FANCON UNIVERSITY OF PENNSYLVANIA
HIGH ENERGY PHYSICS

TITLE: FANOUT_CONNS
FANOUT CONNECTORS

DATE:

ENGINEER:
LAST_MODIFIED=Mon Nov 18 15:04:02 1996

PAGE: 10. B. 2

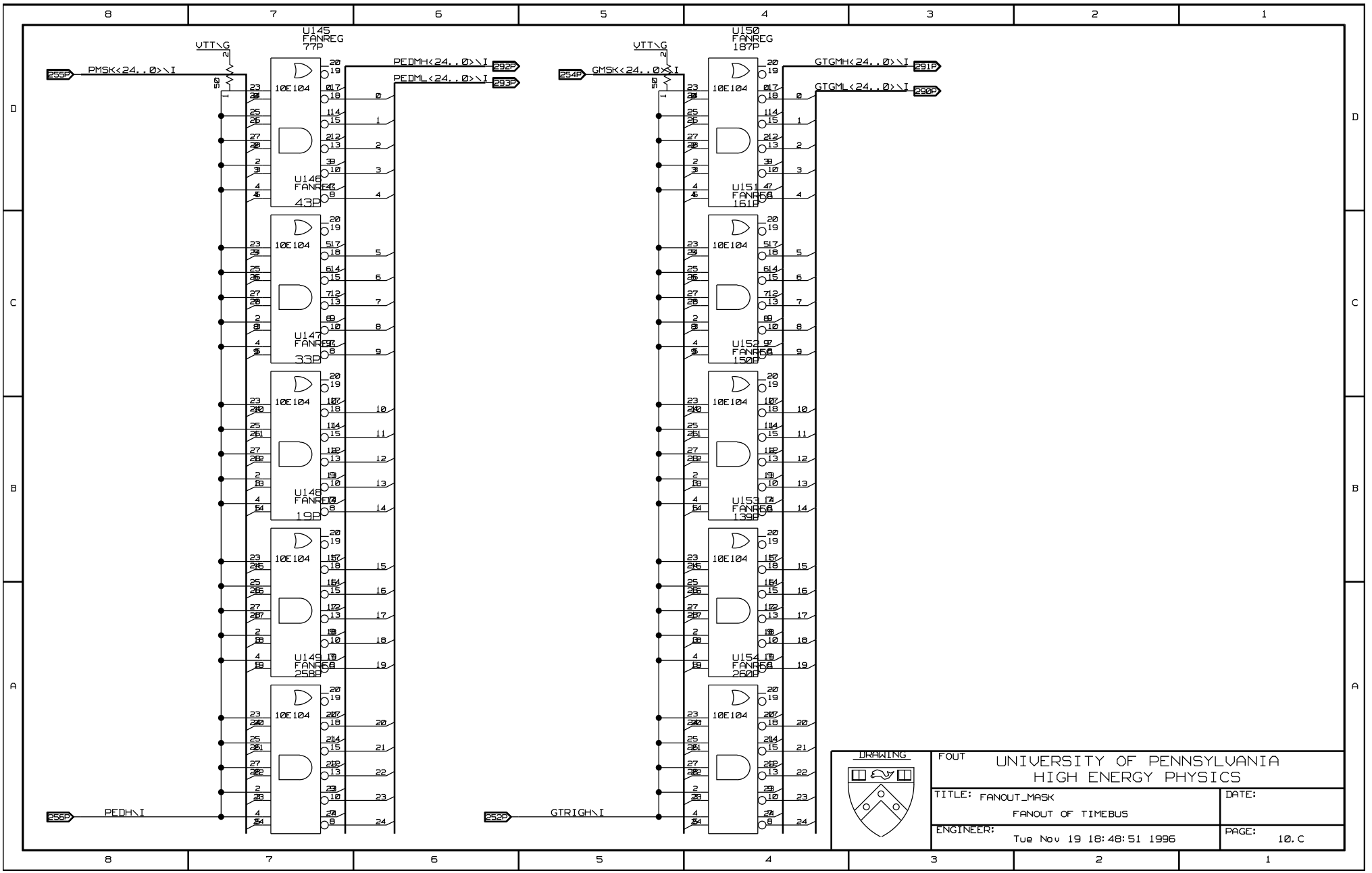
U145
FANREG
77P
U150
FANREG
187P
VTT\G
PMSK<24..0>\I
GMSK<24..0>\I
PEDMH<24..0>\I
PEDML<24..0>\I
GTGMH<24..0>\I
GTGML<24..0>\I
PEDH\I
GTRIGH\I
10E104
U146 FANREG 43P
U147 FANREG 33P
U148 FANREG 19P
U149 FANREG 25BP
U151 FANREG 161P
U152 FANREG 150P
U153 FANREG 139P
U154 FANREG 260P
DRAWING
FOUT
UNIVERSITY OF PENNSYLVANIA
HIGH ENERGY PHYSICS
TITLE: FANOUT_MASK
FANOUT OF TIMEBUS
DATE:
ENGINEER:
Tue Nov 19 18:48:51 1996
PAGE:
10.C