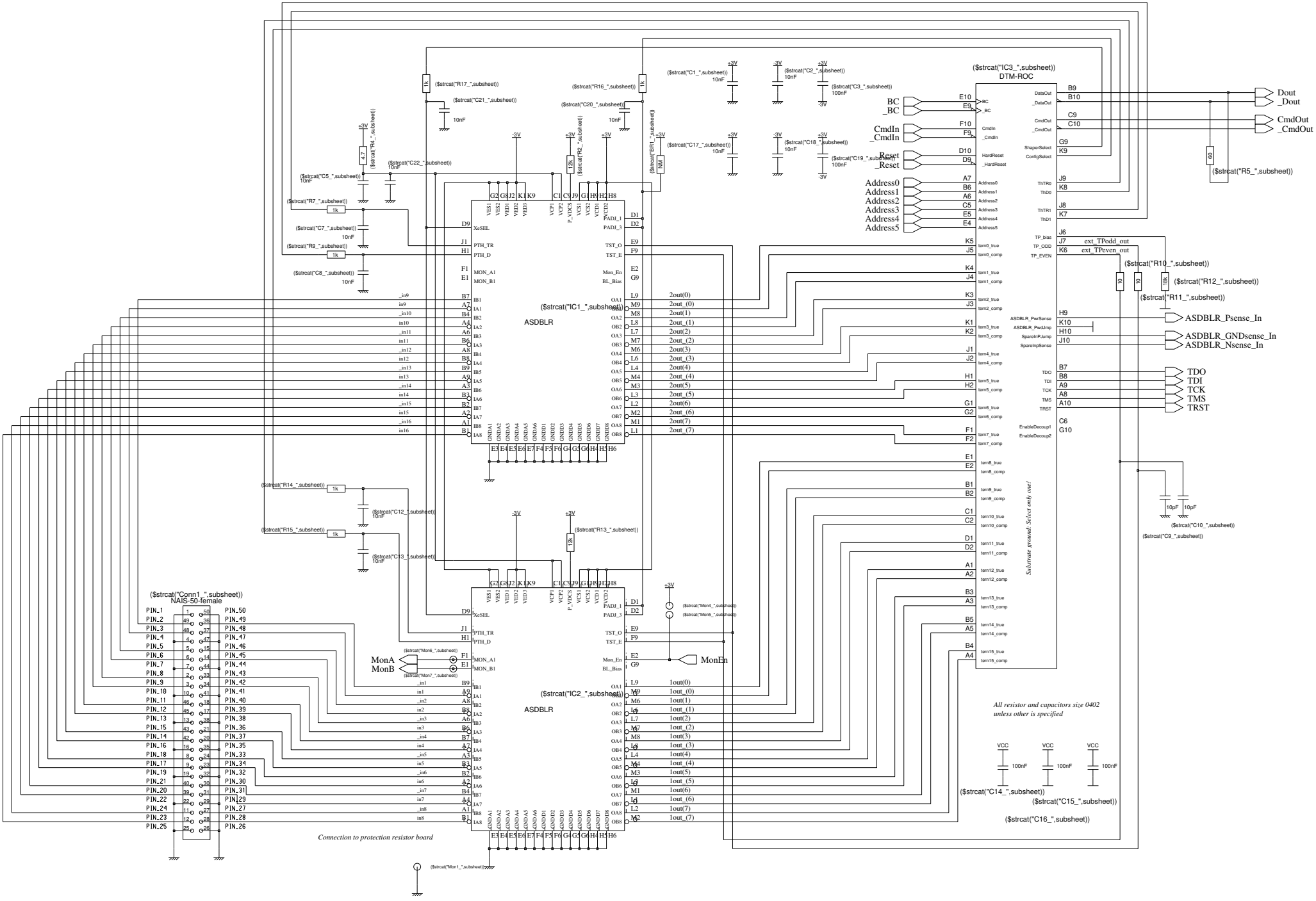
($strcat("IC3_",subsheet))
DTM-ROC
($strcat("IC1_",subsheet))
ASDBLR
($strcat("IC2_",subsheet))
ASDBLR
($strcat("Conn1_",subsheet))
NAIS-50-female
Dout
_Dout
CmdOut
_CmdOut
BC
_BC
CmdIn
_CmdIn
Reset
_Reset
Address0
Address1
Address2
Address3
Address4
Address5
ASDBLR_Psense_In
ASDBLR_GNDsense_In
ASDBLR_Nsense_In
TDO
TDI
TCK
TMS
TRST
MonA
MonB
MonEn
ext_TPodd_out
ext_TPeven_out
Substrate ground. Select only one!
All resistor and capacitors size 0402
unless other is specified
Connection to protection resistor board